MI032601

TEOS Modular Enclosure- Flat Pack Mounting Instruction

NEMA 12

www.tekpan.com

tekpan®
INDUSTRIAL ENCLOSURES & CABINETS

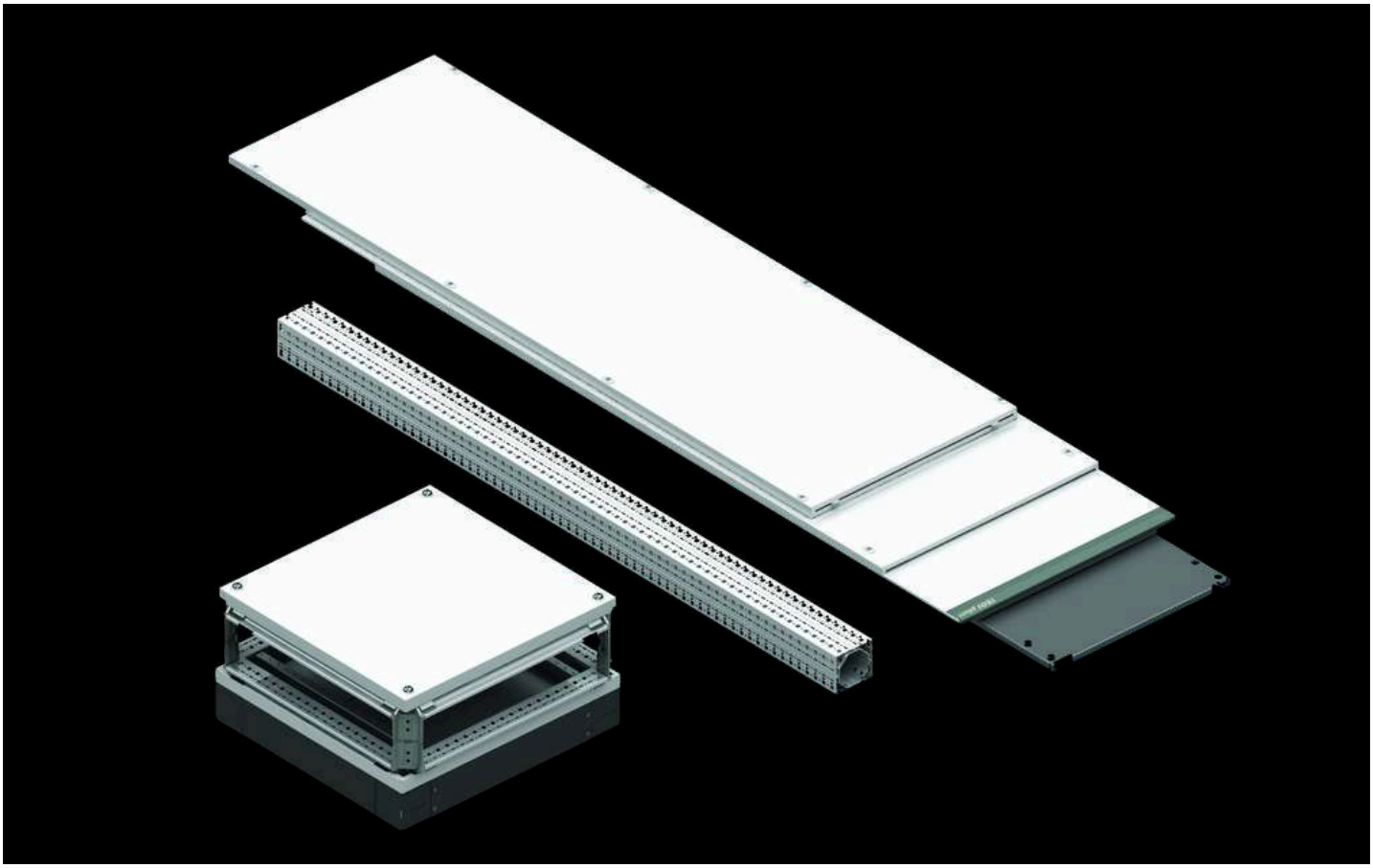

CONTENTS:

1. DESCRIPTIONS 4

2. SAFETY INSTRUCTIONS 5

3. TORQUE TABLE for SCREWS/BOLTS 6

4. ASSEMBLY
4.1 Frame assembly 7
4.2 Removing the top plate 11
4.3 Gland Plate assembly 12
4.4 Rear Panel assembly 13
4.5 Door assembly 14
4.6 Door Position changing 16
4.7 Changing the lock insert 17
4.8 Mounting Plate assembly 18
4.9 Plinth assembly 21
4.10 Baying Enclosures 23
4.11 Side Panels assembly 24
4.12 Earthing and potential equalisation 26
4.13 Fixing The Enclosure to the Floor 28

5. TRANSPORT 29

6. LOADING WEIGTHS 31

7. POWER DISSIPATION CAPACITY 32

8. MAINTENANCE 34

9. STORAGE 34

1. DESCRIPTIONS

Floor-Free standing, indoor type, modular enclosures (suitable for side-by-side and back to back combination)variant with Single Door , Double Door and Mounting Plate empty enclosures, for low voltage switching device combinations with a maximum voltage rating of 1000 V AC or 1500 V DC

Standards Compliance: UL 50E and IEC 62208
Protection Ratings :
Protection Ratings: Single Door :UL/cUL Type 1 , 12 - UL File Number E352599 / IP65 (IEC 60 529)
Double Door : UL/cUL Type 1 , 12 - UL File Number E352599 / IP54 (IEC 60 529)
Corrosion Resistance: C3-M according to EN ISO 12944-2
Impact Protection: IK10 according to IEC EN 60529

Door Types :
* Single Door : 130° right hand hinged door (reverse is possible) , 4-point latching tool-to-open lineer handle with 5mm double-bit insert
* Double Doors : 130° right hand hinged double doors , 4-point latching tool-to-open lineer handle with 5mm double-bit insert to open right door ,2-point latching tool with inner handle to open left door

Materials:
Door(s) 2mm , rear panel and top panel 1,5mm : DC-01 Carbon SteelFrame 1,5mm, gland plates 1,5mm, Mounting Plate 3mm : DX51 Galvanized Steel

Surface Finish:
Frame, door(s), rear panel, top panel : Nano coating primed, RAL 7035 Light Gray with textured powder coated

Supply Includes :
Top-Bottom Group (Frame,roof,gland plates), Vertical Frames (4pcs), Door(s), Rear Panel , Mounting Plate

Options:
Plinth, side panels, baying kit, and other accessories

701.450
701.460
701.480
701.640
701.650
701.660
701.680
701.610
701.740
701.750
701.760
701.780
701.840
701.850
701.860
701.880
701.810
701.040
701.050
701.060
701.080
701.240
701.250
701.260
701.280

702.120
702.160
702.180
702.200
702.220

With Cyldrical insert	With 5mm Double-bit insert
724.418	734.418
724.420	734.420
724.612	734.612
724.616	734.616
724.618	734.618
724.620	734.620
724.622	734.622
724.720	734.720
724.812	734.812
724.816	734.816
724.818	734.818
724.811	734.811
724.820	734.820
724.821	734.821
724.822	734.822
724.018	734.018
724.020	734.020
724.021	734.021
724.212	734.212
724.216	734.216
724.218	734.218
724.220	734.220
724.222	734.222
724.160	734.160

With Cyldrical insert	With 5mm Double-bit insert
725.618	735.618
725.620	735.620
725.720	735.720
725.818	735.818
725.820	735.820

703.418
703.420
703.612
703.616
703.618
703.620
703.622
703.720
703.812
703.816
703.818
703.820
703.822
703.018
703.020
703.212
703.216
703.218
703.220
703.222
703.160

707.418
707.420
707.612
707.616
707.618
707.620
707.622
707.718
707.720
707.812
707.816
707.818
707.820
707.822
707.018
707.020
707.212
707.216
707.218
707.220
707.222
707.160

2. SAFETY INSTRUCTIONS

2.1 General Safety

•Assembly must be carried out by qualified and trained personnel only.
•These instructions must be fully read and understood before installation.
•The product shall be used only for its intended purpose.
•The working area must be clean, dry, and adequately illuminated.
•Improper use may result in serious injury or equipment damage.

2.2 Personal Protective Equipment (PPE)

The following equipment must be used during assembly :
•Cut-resistant protective gloves
•Safety shoes
•Safety goggles
•Workwear and safety helmet when required

2.3 Handling and Lifting

•Heavy components must not be lifted by a single person.
•Suitable lifting equipment (e.g. forklift, crane) must be used.
•Components may have sharp edges – handle with care.
•Products must be transported in a balanced and secured manner to prevent tipping.

2.4 Assembly Safety

•All components must be assembled on a stable and level surface.
•Fasteners and bolts must be tightened according to the specified torque values.
•Do not assemble with missing or damaged components.
•Be cautious of finger entrapment during assembly.
•Provide adequate support to prevent the enclosure from tipping over.

2.5 Electrical Safety

•The enclosure must be de-energized during installation.
•Electrical connections must be carried out by qualified electrical personnel only.
•Protective earthing (grounding) must be completed after assembly.
•Compliance with IEC 61439 and relevant standards must be ensured.

2.6 Environmental Conditions

•Assembly must not be performed in excessively humid or dusty environments.
•The product must be installed to maintain the specified IP protection rating.
•For outdoor applications - if the permitted of the enclsosure-, suitable accessories (e.g. rain canopy) must be used.

2.7 Inspection Before Commissionning

•All connections must be checked.
•Doors and panels must operate properly and close correctly.
•Sealing elements must be correctly installed.
•Mechanical stability and installation accuracy must be verified.

2.8 Maintenance and Modification

•Unauthorized modifications to the product are not permitted.
•Maintenance must be performed by qualified personnel only.
•Damaged parts must be replaced with original spare parts.

3. TORQUE TABLE for SCREWS/BOLTS

Recommended tightening torque for mechanical and electrical links *8.8-class screws (with nut + washers)*	
Diameter of Screw	Tightening Torque (N.m)
M3	1.5
M4	3.5
M5	7
M6	13
M8	28
M10	50
M12	75

Tightening torque for electrical links on the devices and for their fixing:

Marking varnish:

After tightening each electrical connection to the appropriate torque, apply somevarnish:

✓ Between the nut and the screw or
✓ Between the screw head and the copper bar or
✓ Between the device for tightening on a threaded part

Varnish should not block the screw:

✓ It allows operator inspection, to verify if the bolts/ nut are tightened or not.
✓ It facilitates the identification of any loose nuts during the switchboard's lifetime.

Varnish features: ✓ Coloured acrylic varnish, indelible and able to resist a 150° C temperature.
✓ PDS recommends a red varnish as a standard to identify the panelbuilder's work.
✓ Other colours can be used by the contractoror any operators entitled to work on the switchboard after its commissioning.

4. ASSEMBLY

4.1 Frame assembly

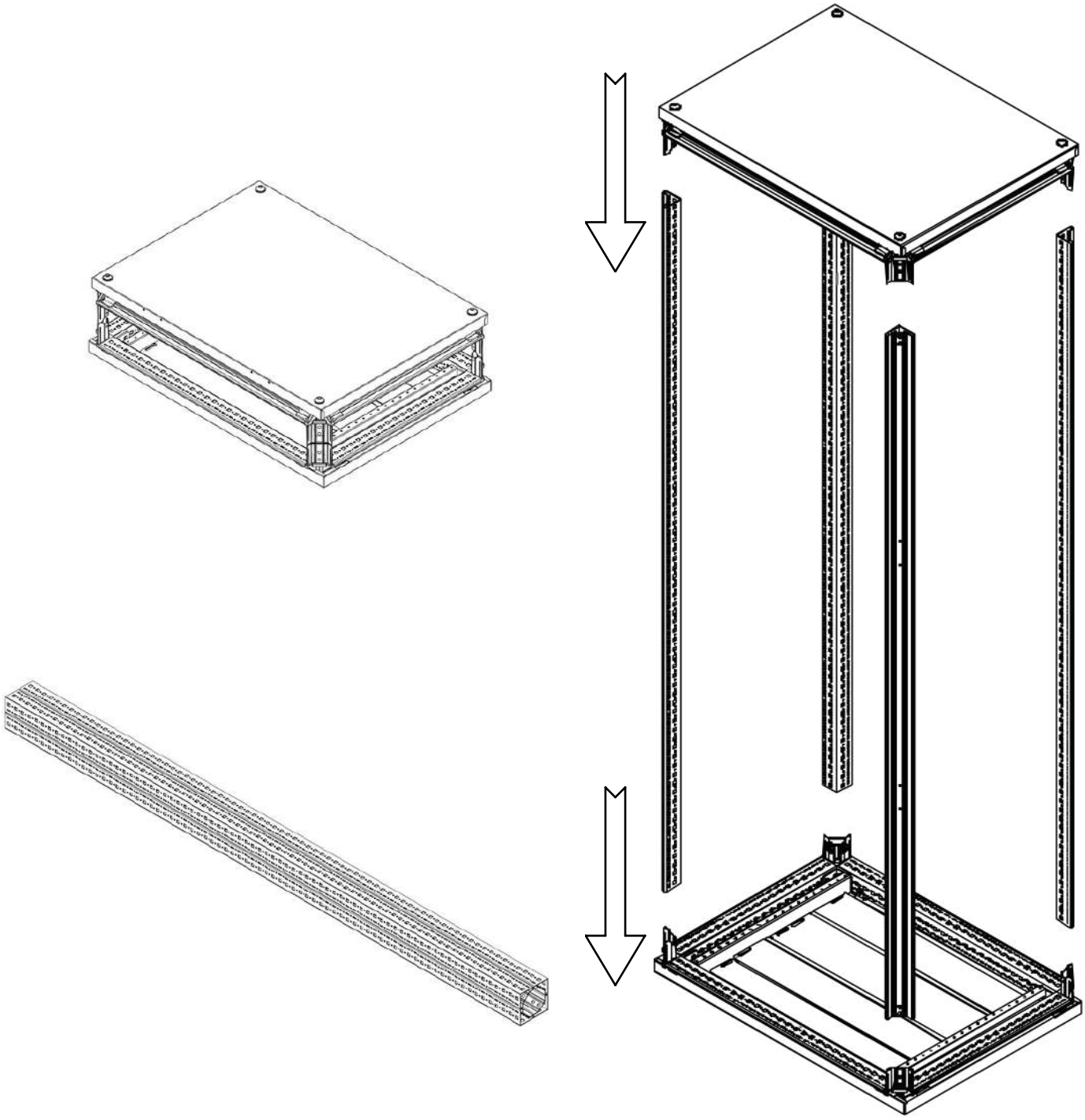

4. ASSEMBLY

4.1 Frame assembly

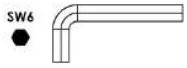

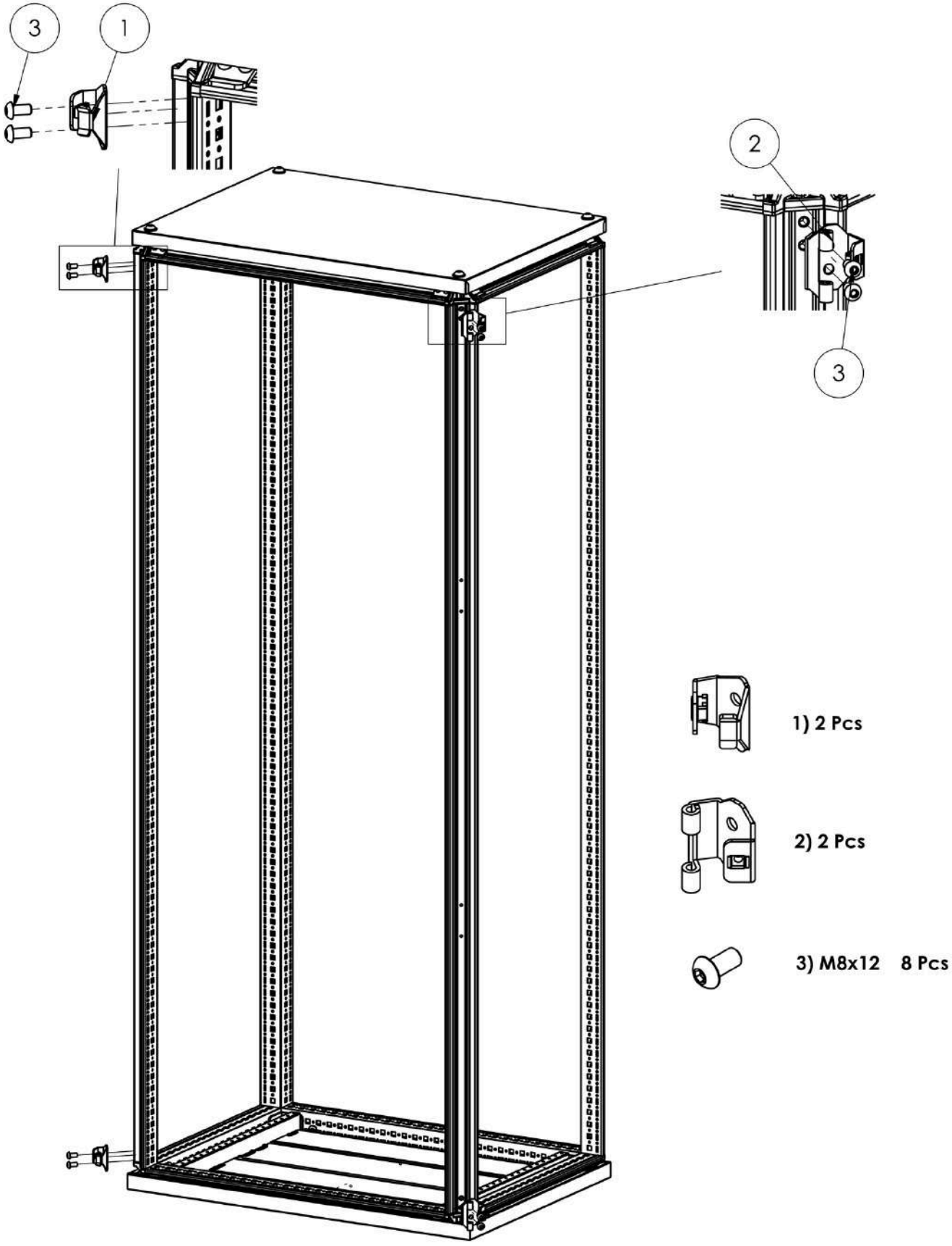

4. ASSEMBLY

4.1 Frame assembly

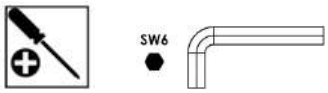

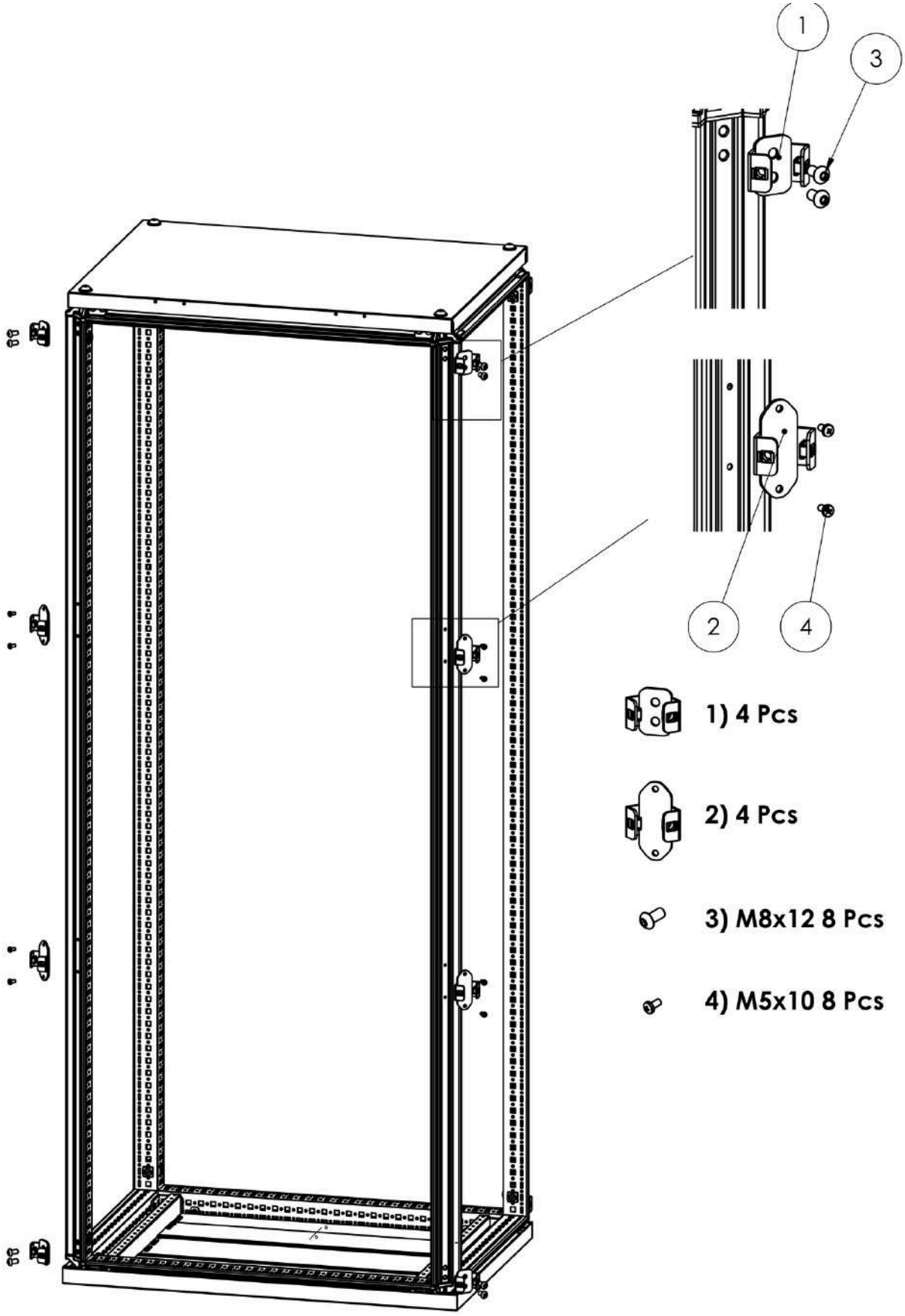

4. ASSEMBLY

4.1 Frame assembly

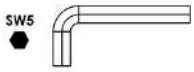

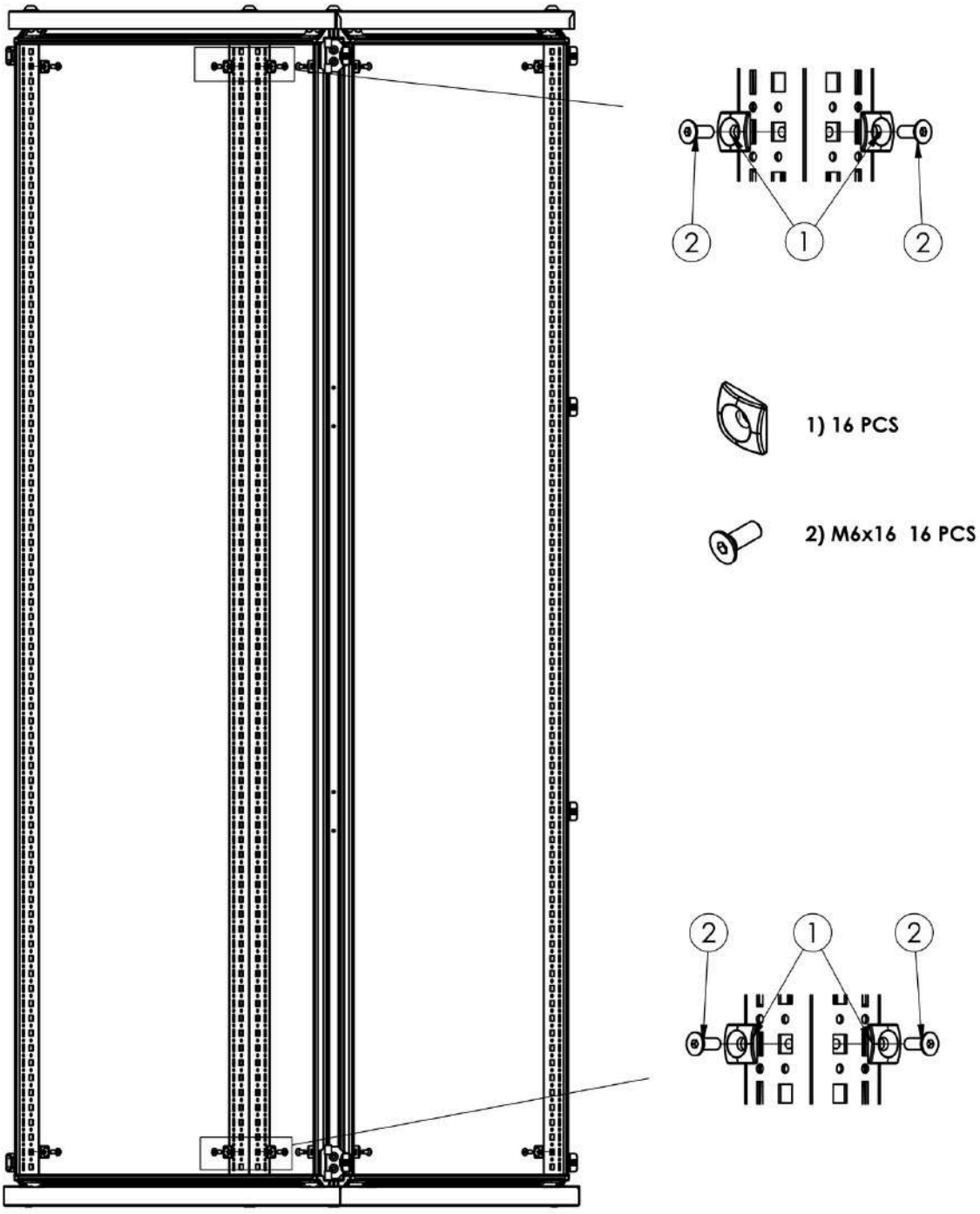

4. ASSEMBLY

4.2 Removing the top plate

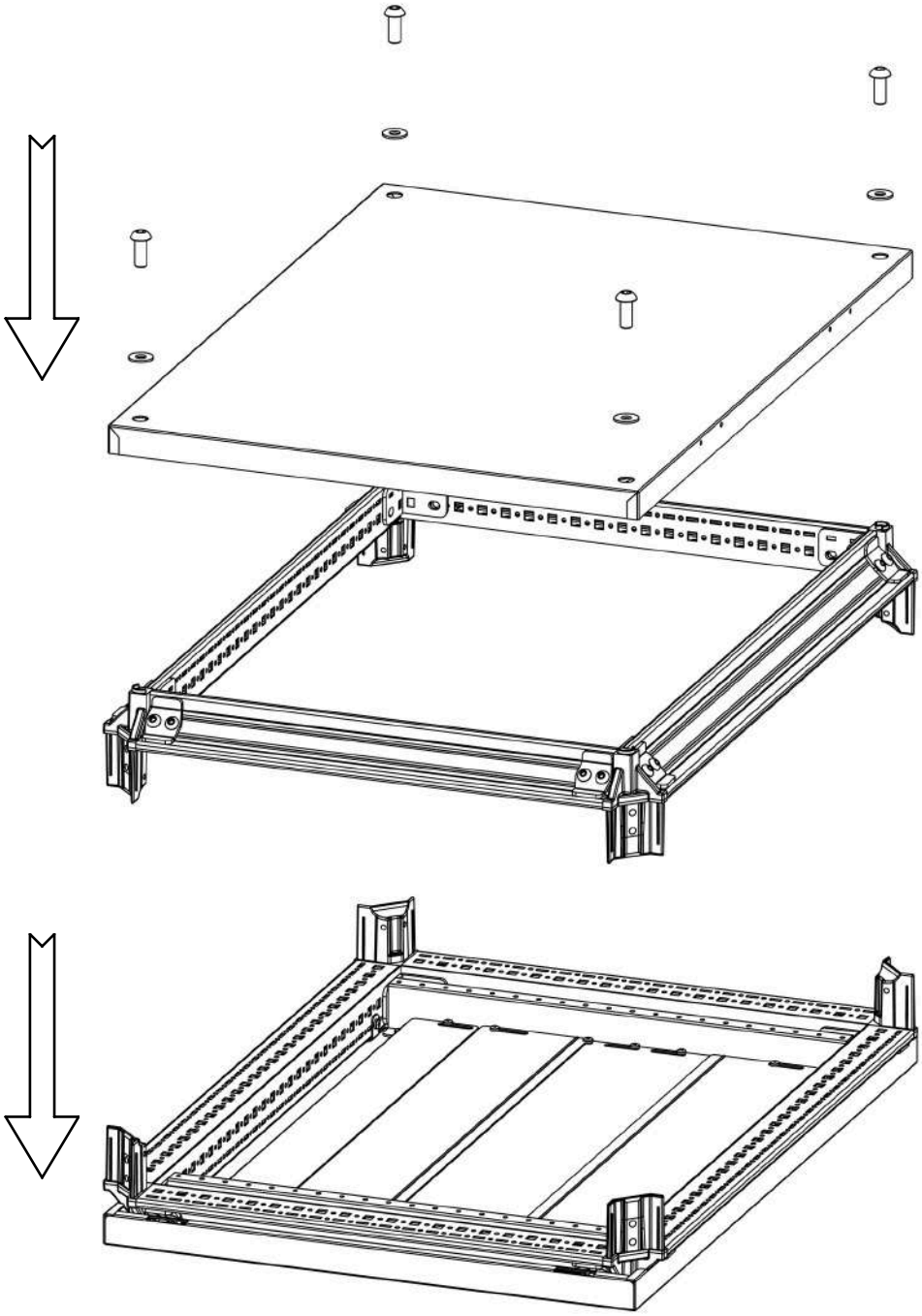

4. ASSEMBLY

4.3 Gland Plate assembly

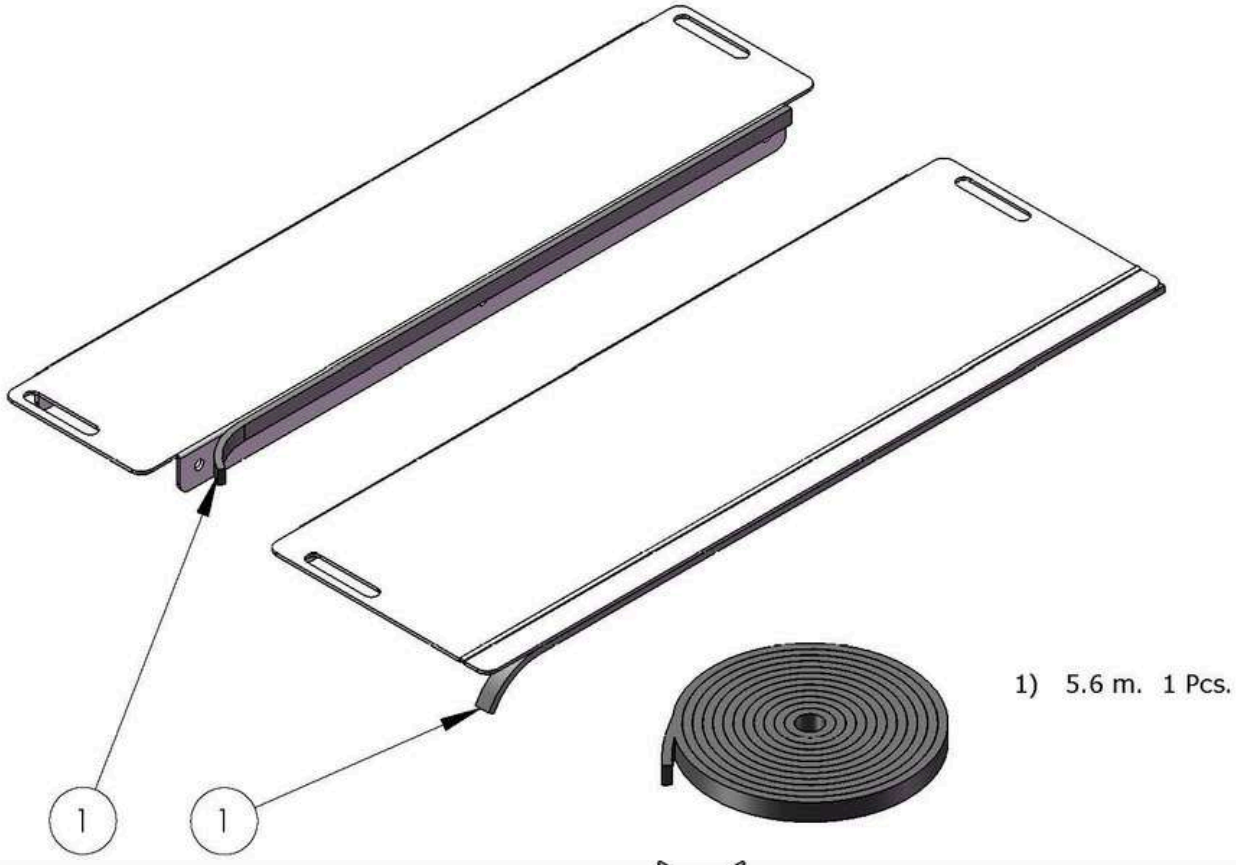

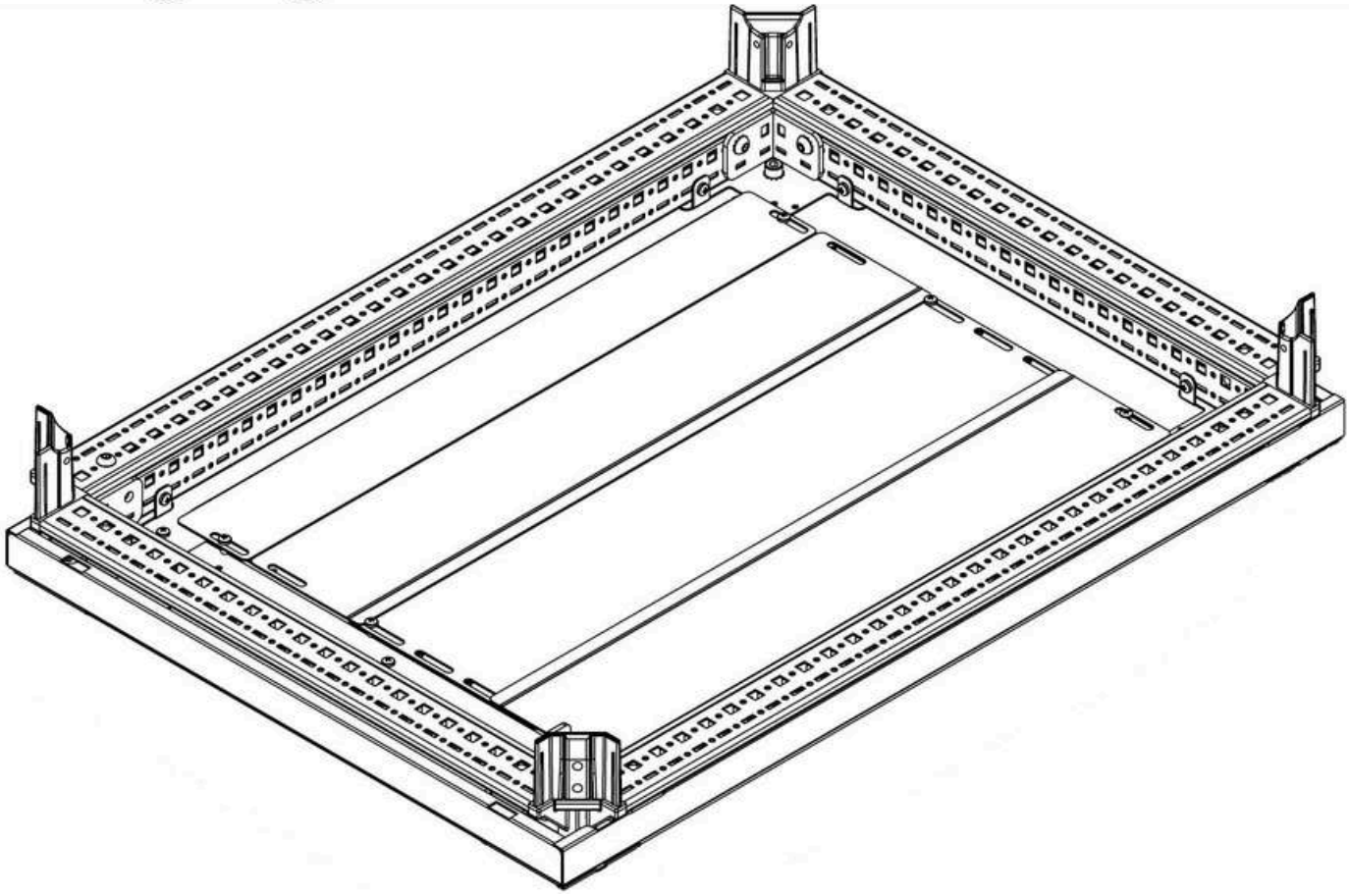

4. ASSEMBLY

4.4 Rear Panel assembly

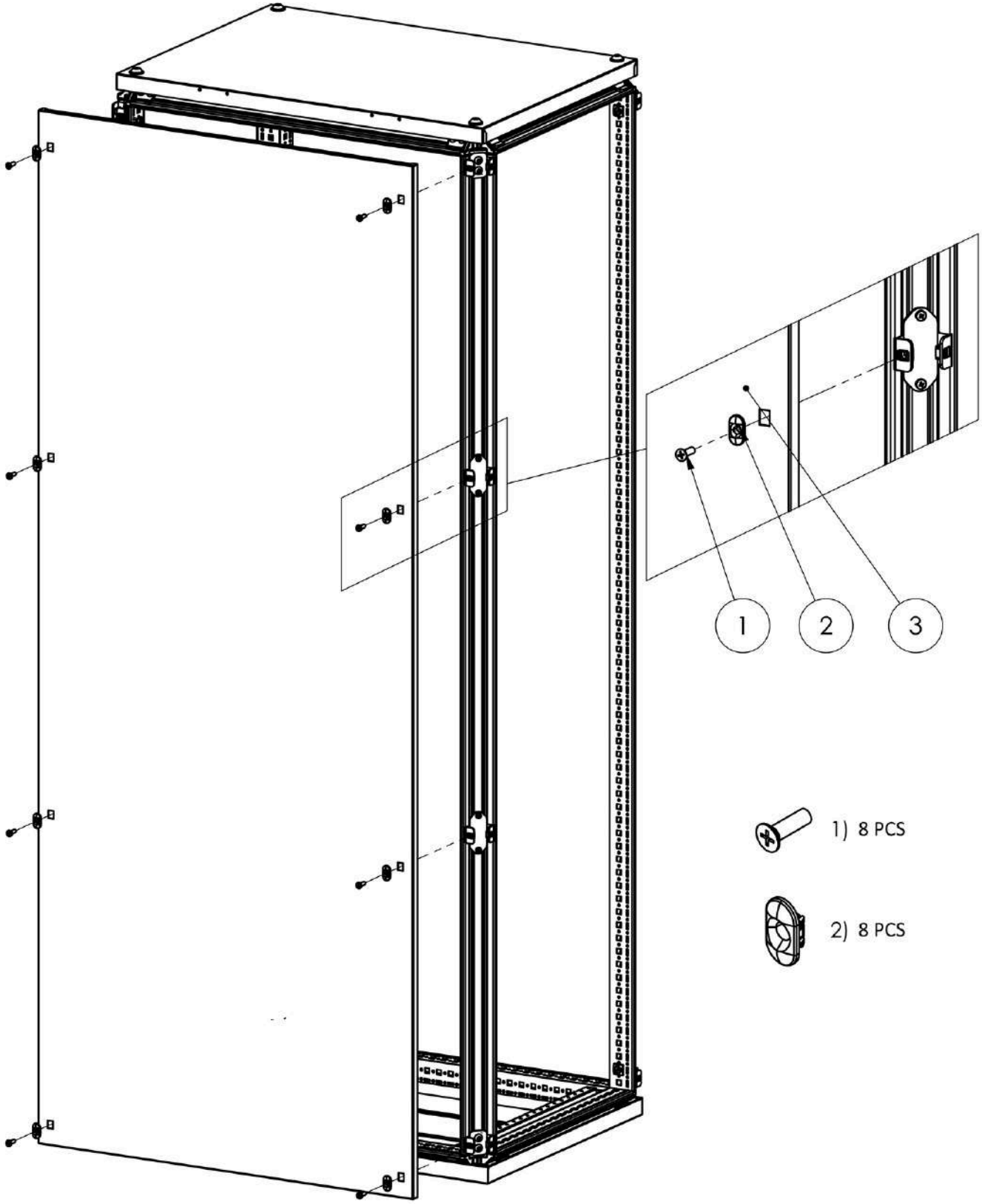

4. ASSEMBLY

4.5 Door assembly

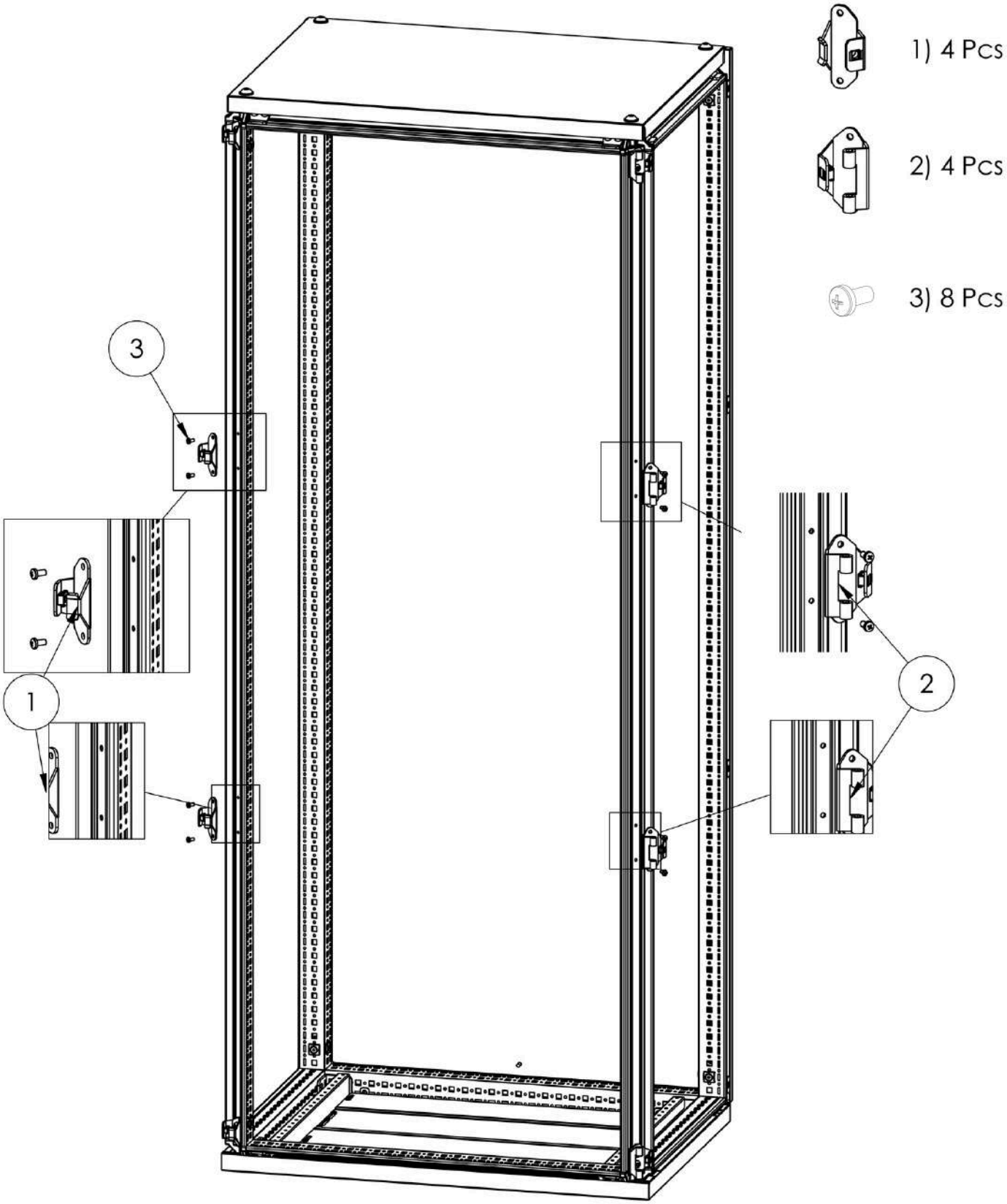

4. ASSEMBLY

4.5 Door assembly

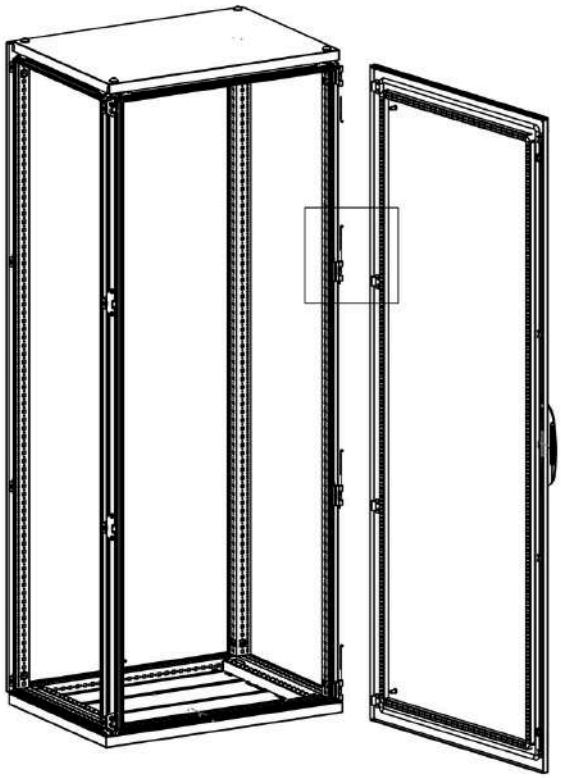

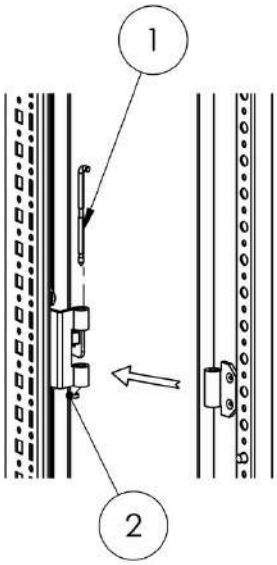

1) 4 Pcs

2) 4 Pcs

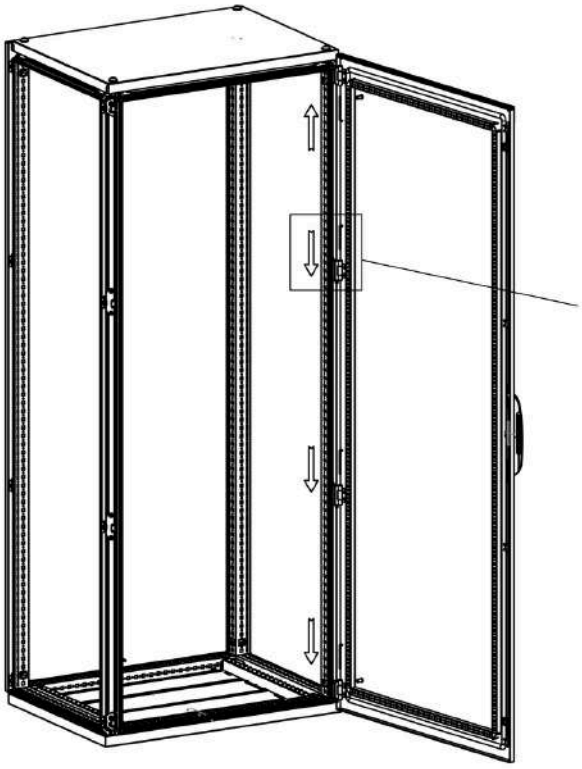

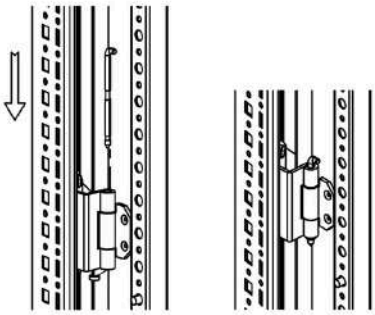

4. ASSEMBLY

4.6 Door Position changing

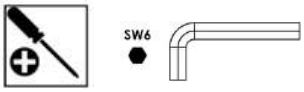

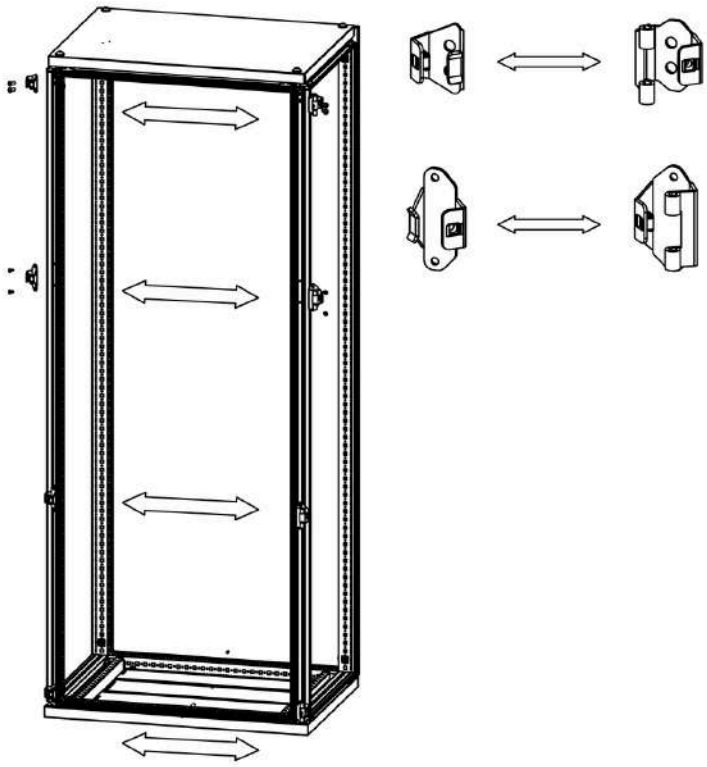

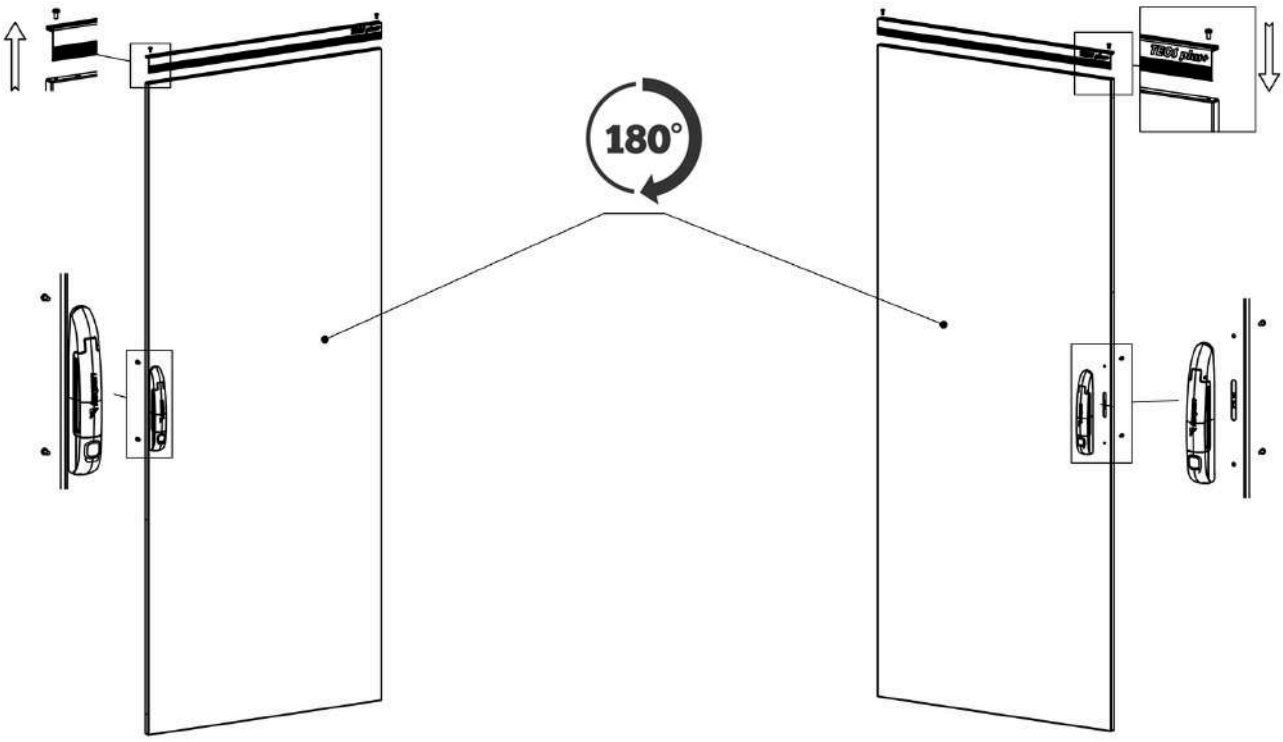

4. ASSEMBLY

4.7 Changing the lock insert

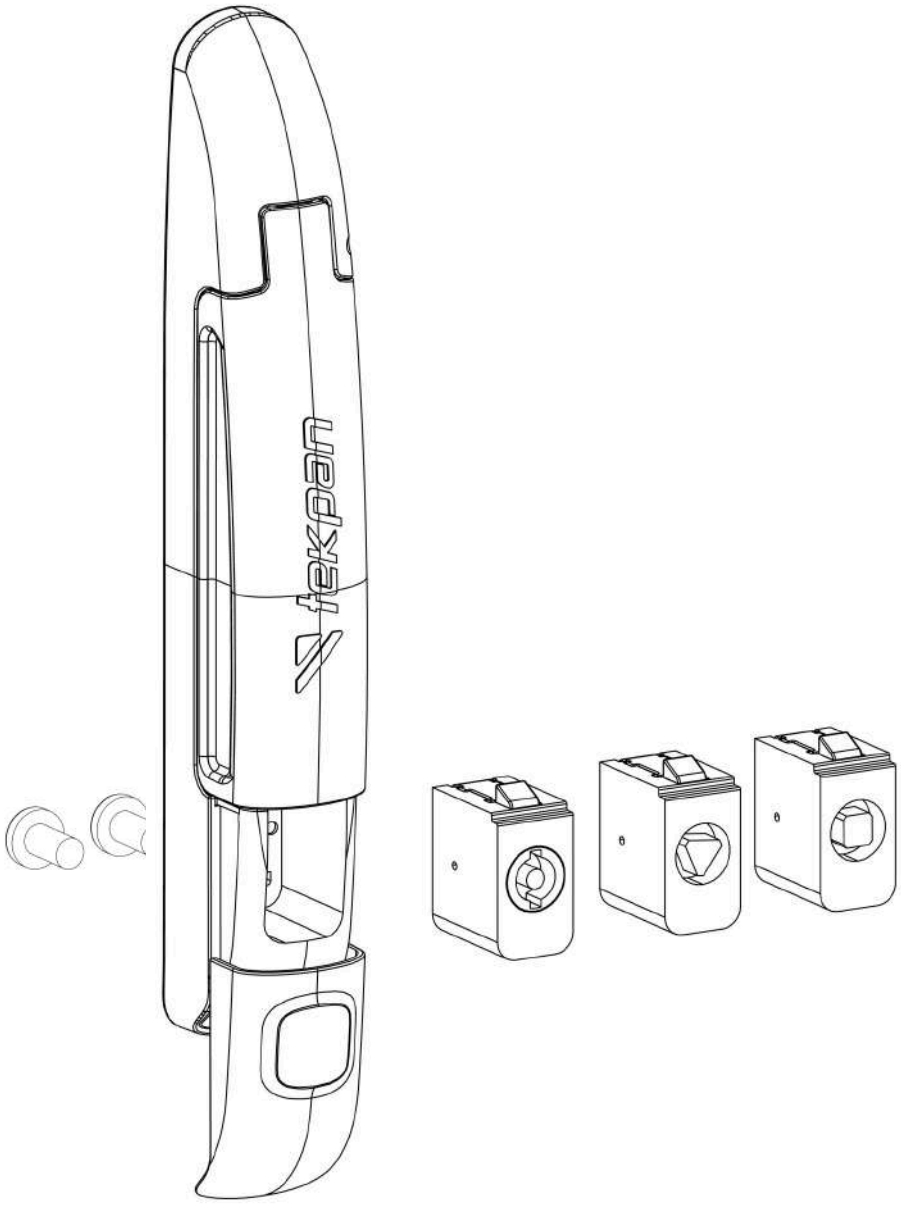

4. ASSEMBLY

4.8 Mounting Plate assembly

Product Code : 711.000

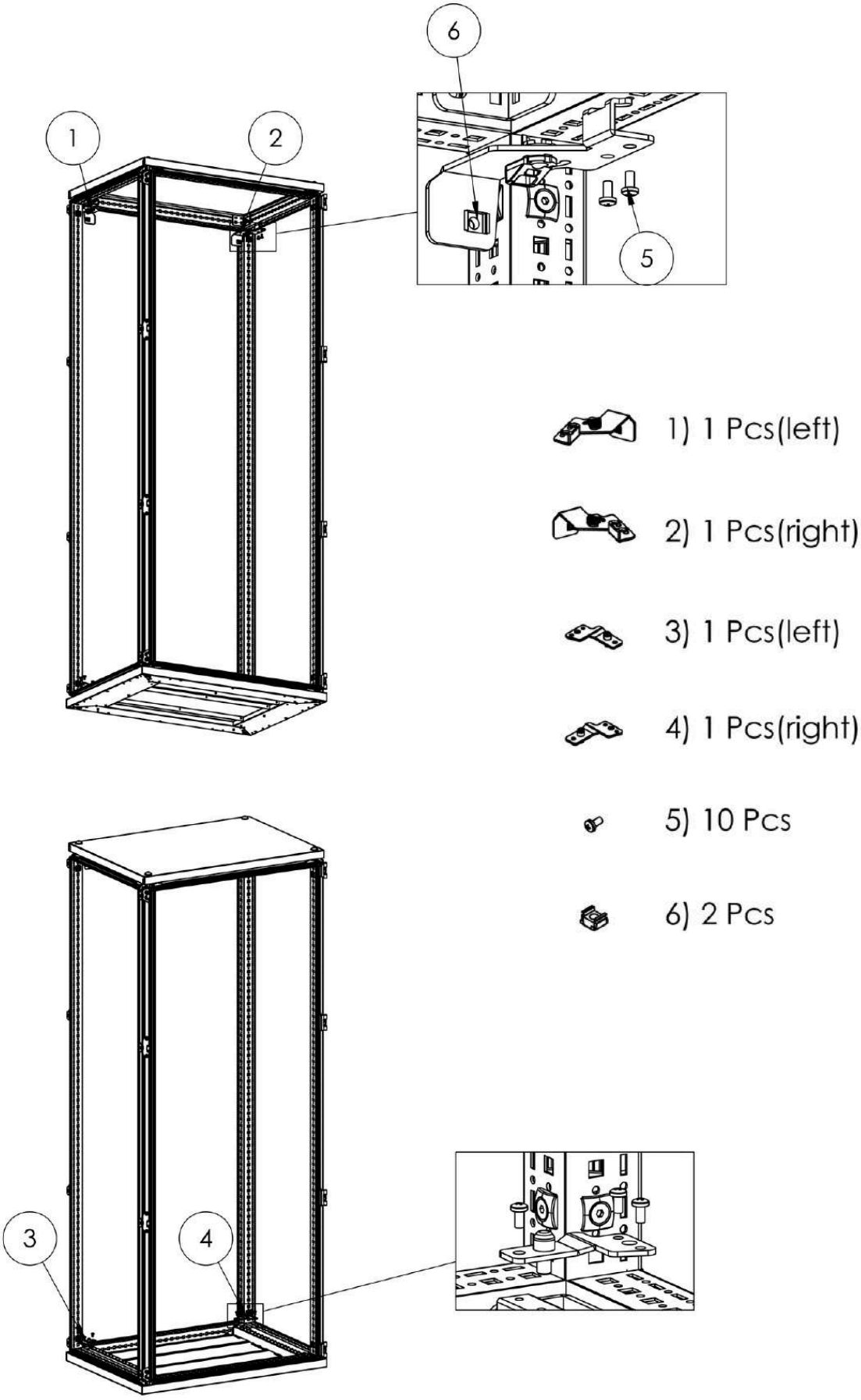

4. ASSEMBLY

4.8 Mounting Plate assembly

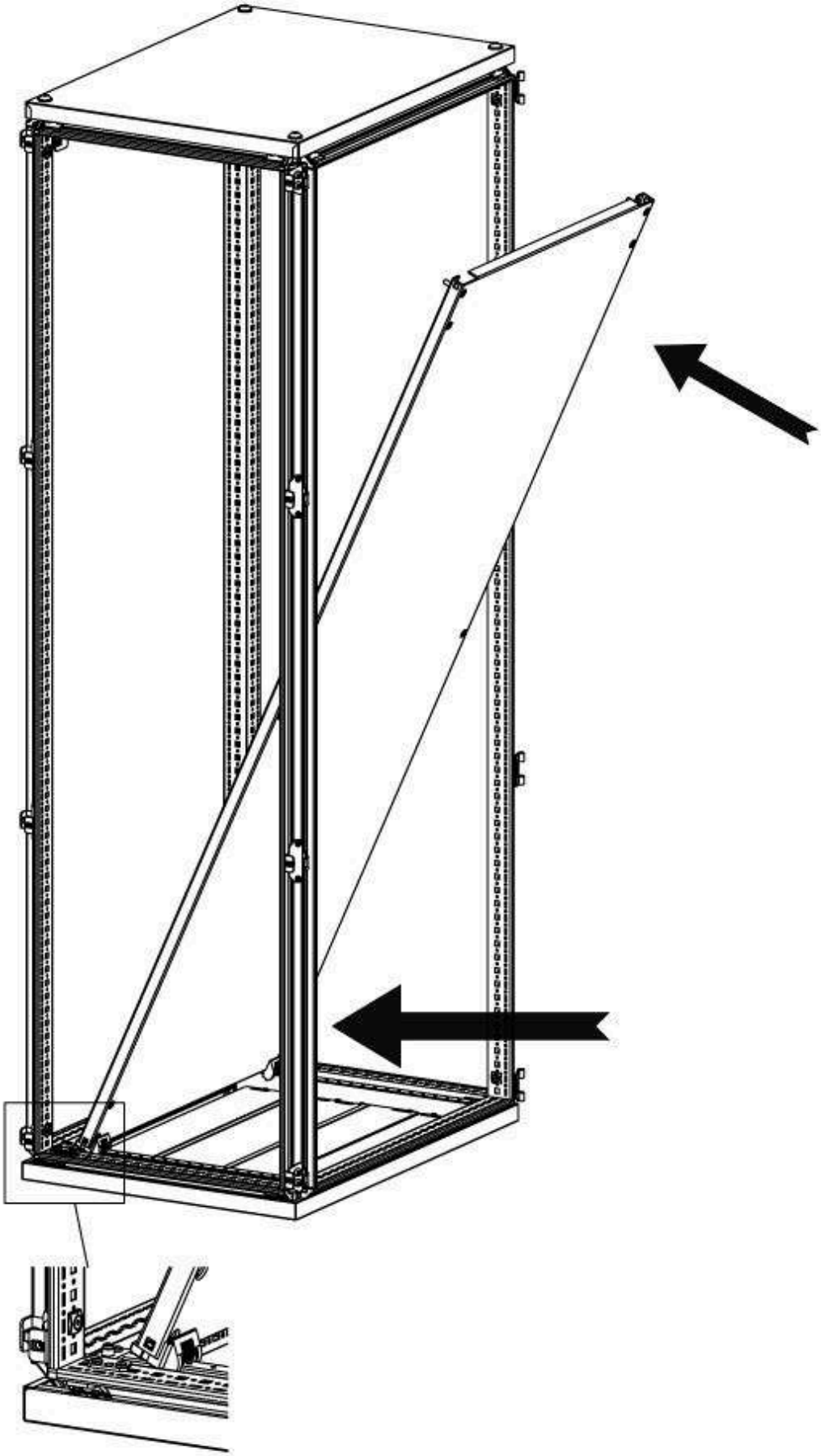

4. ASSEMBLY

4.8 Mounting Plate assembly

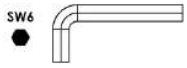

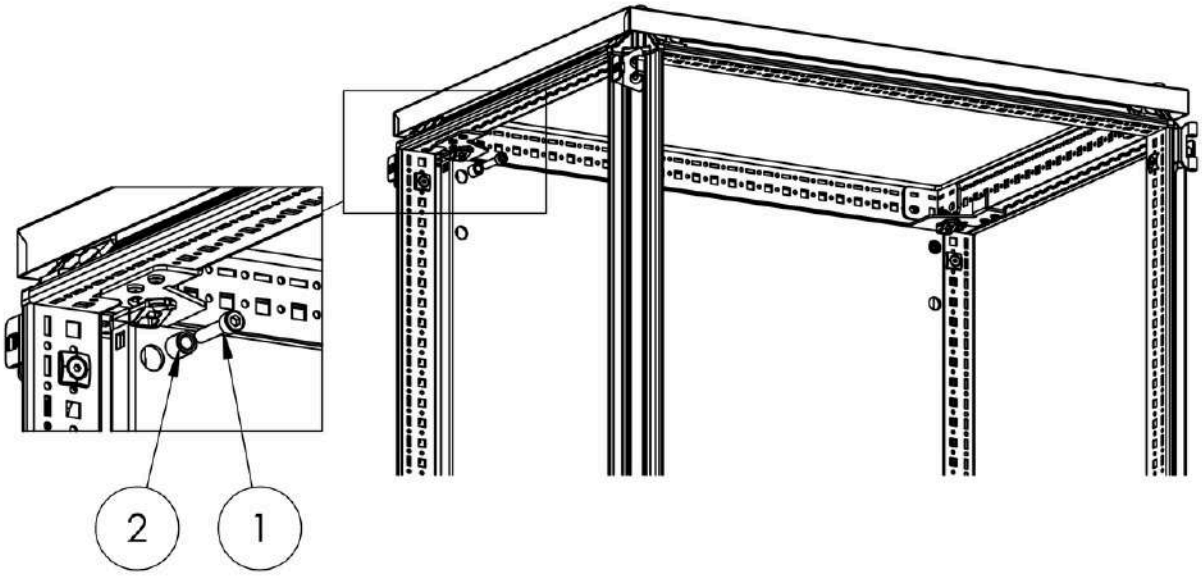

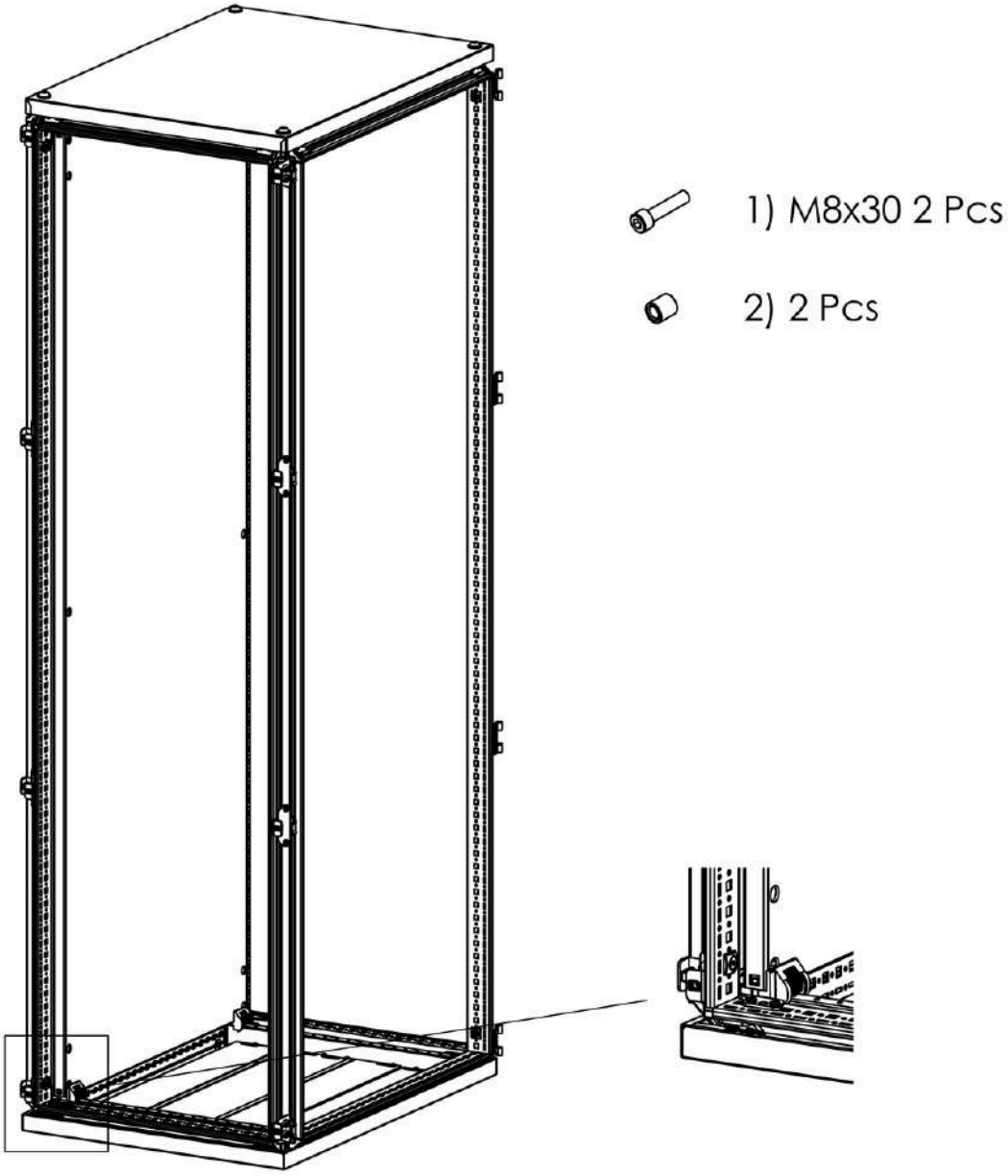

4. ASSEMBLY

4.9 Plinth assembly

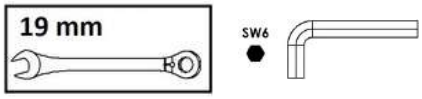

Plinth product code
corner part: 708.xxx
front covers: 709.xxx
side covers: 710.xxx

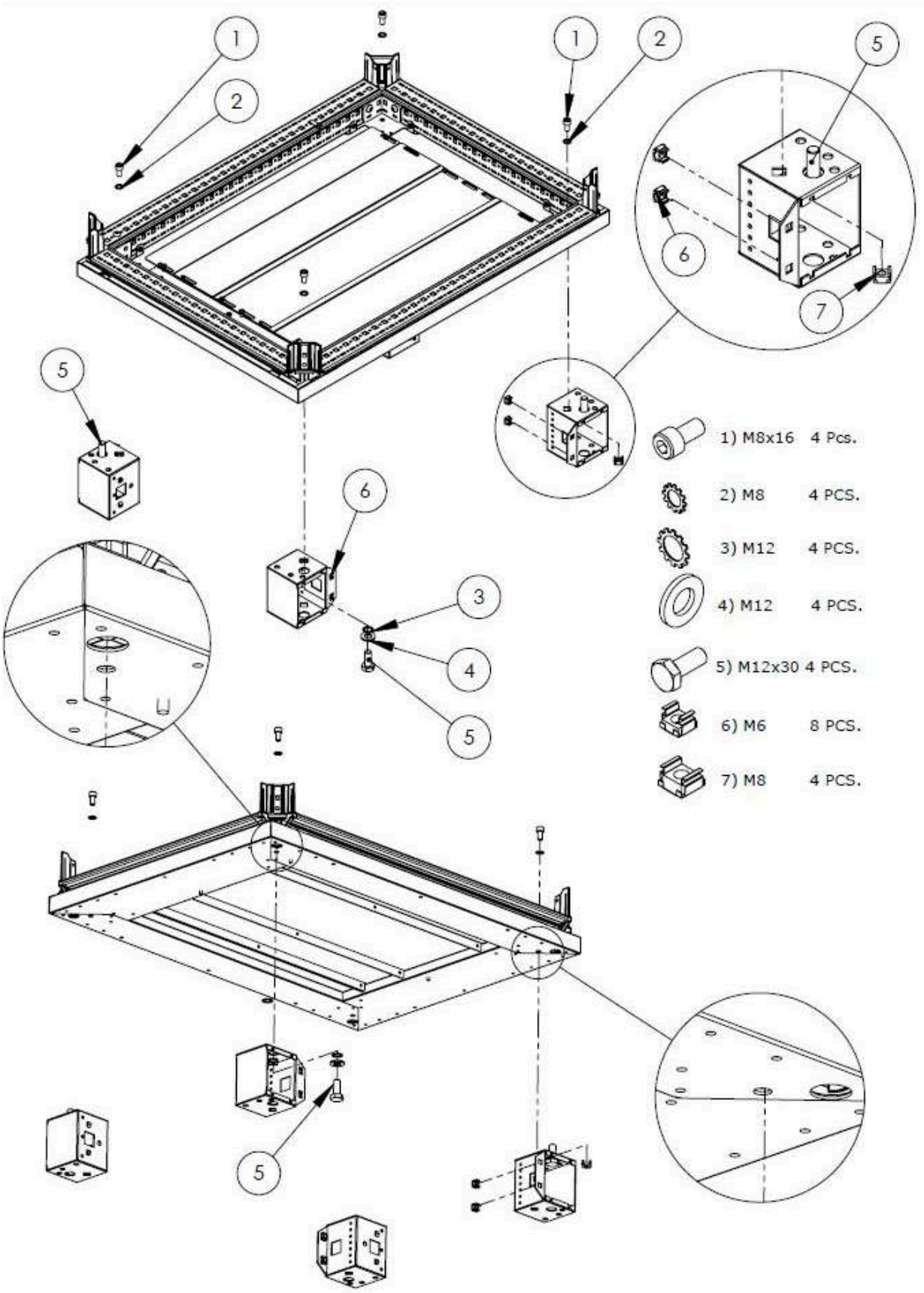

4. ASSEMBLY

4.9 Plinth assembly

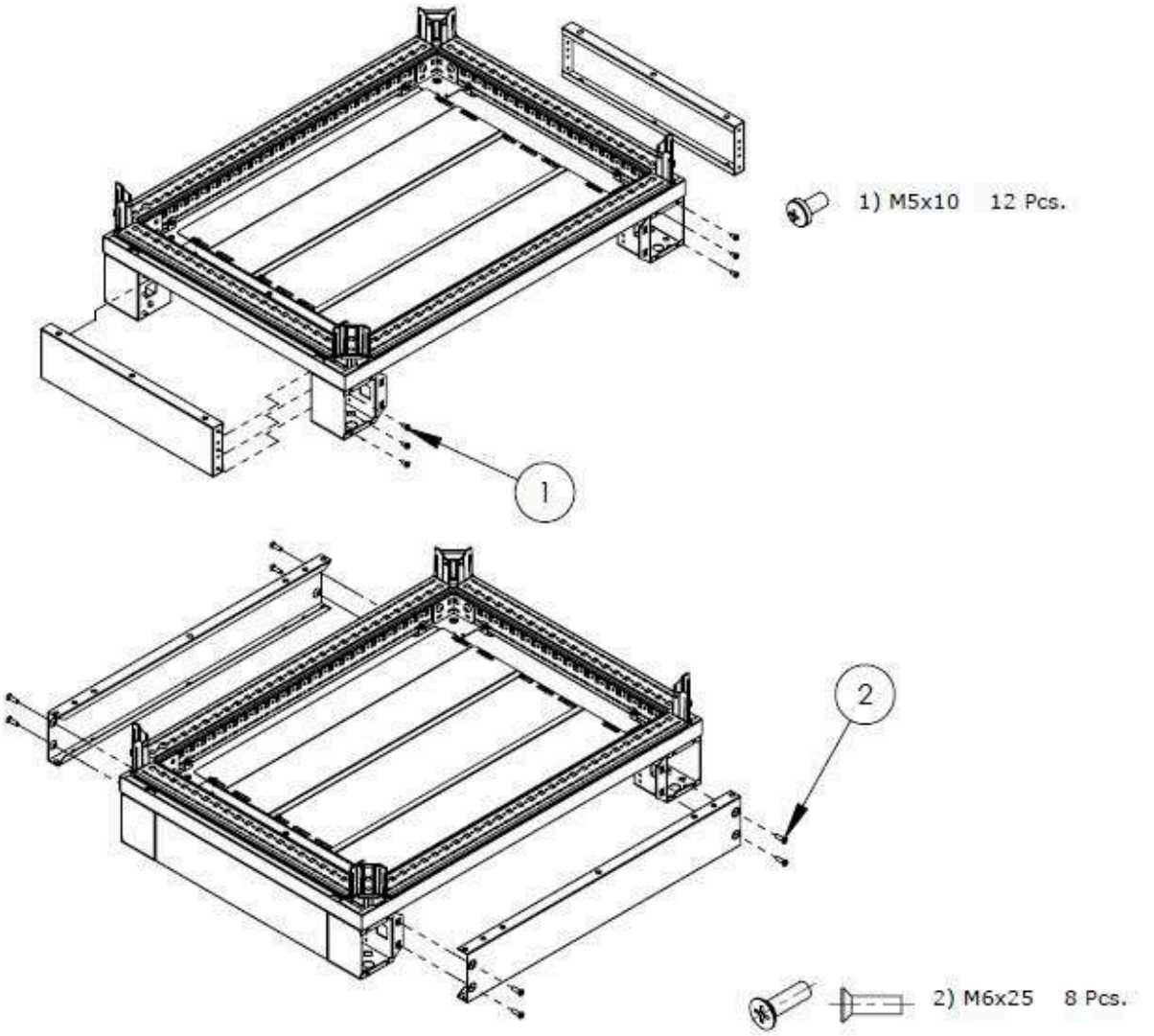

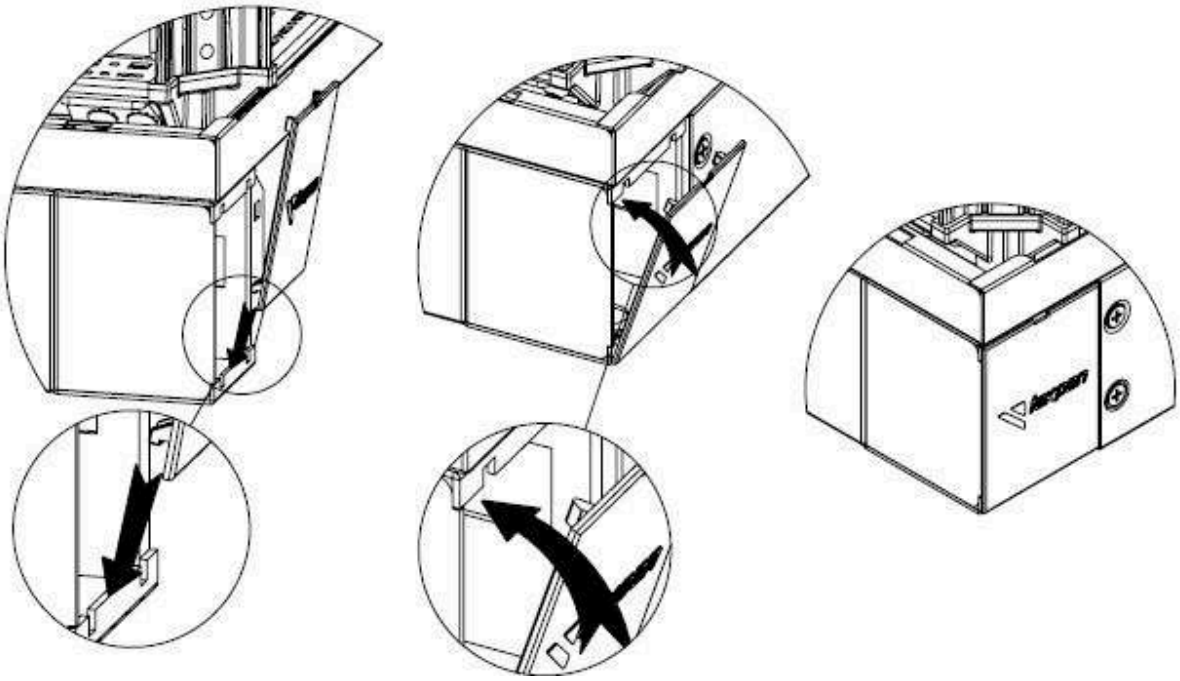

4. ASSEMBLY

4.10 Baying Enclosures

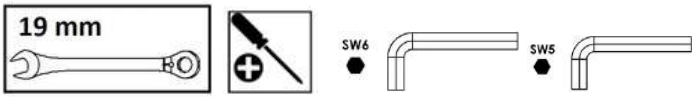

Product Code : 711.000

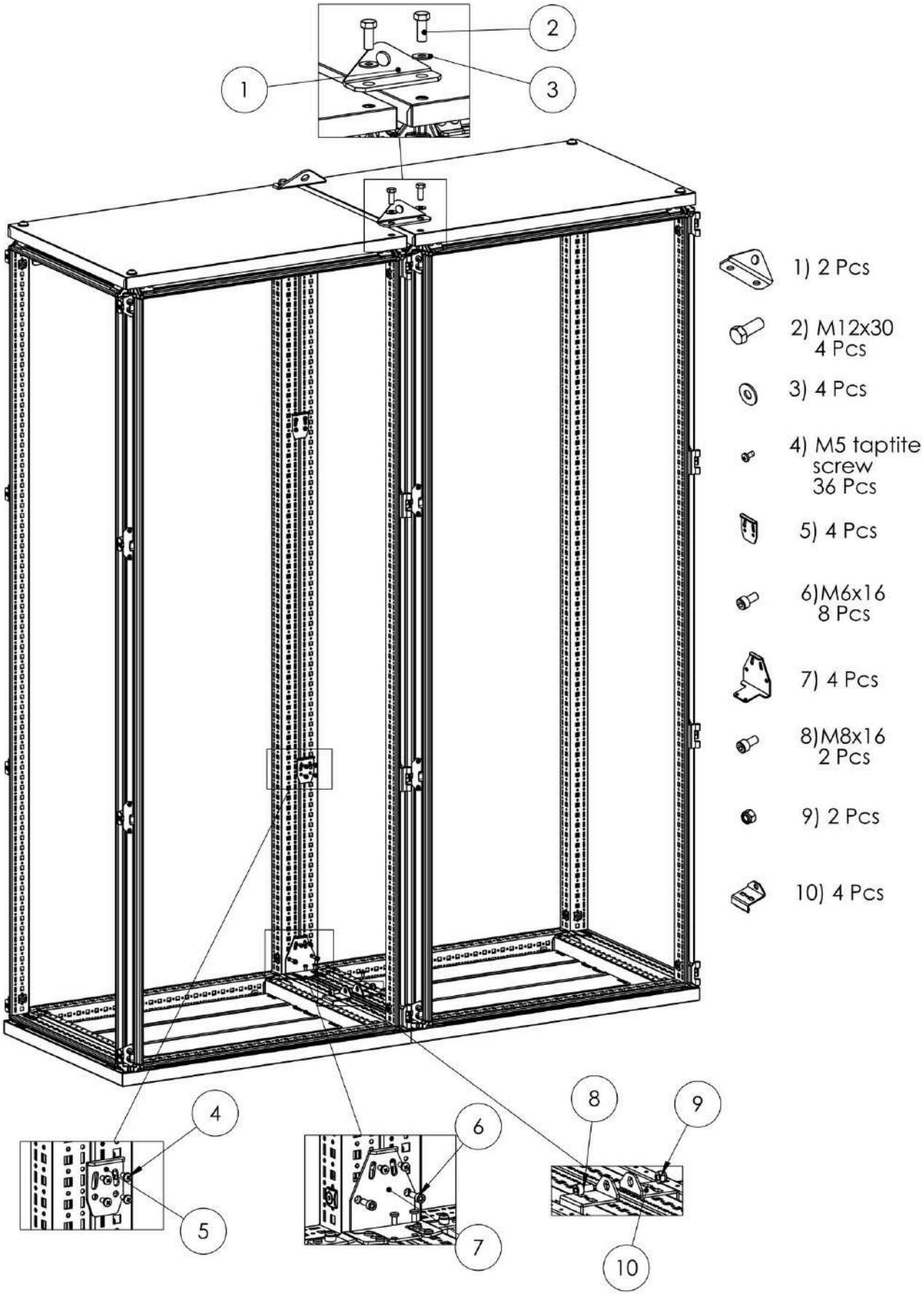

4. ASSEMBLY

4.11 Side Panels assembly

Product Code : 706.xxx

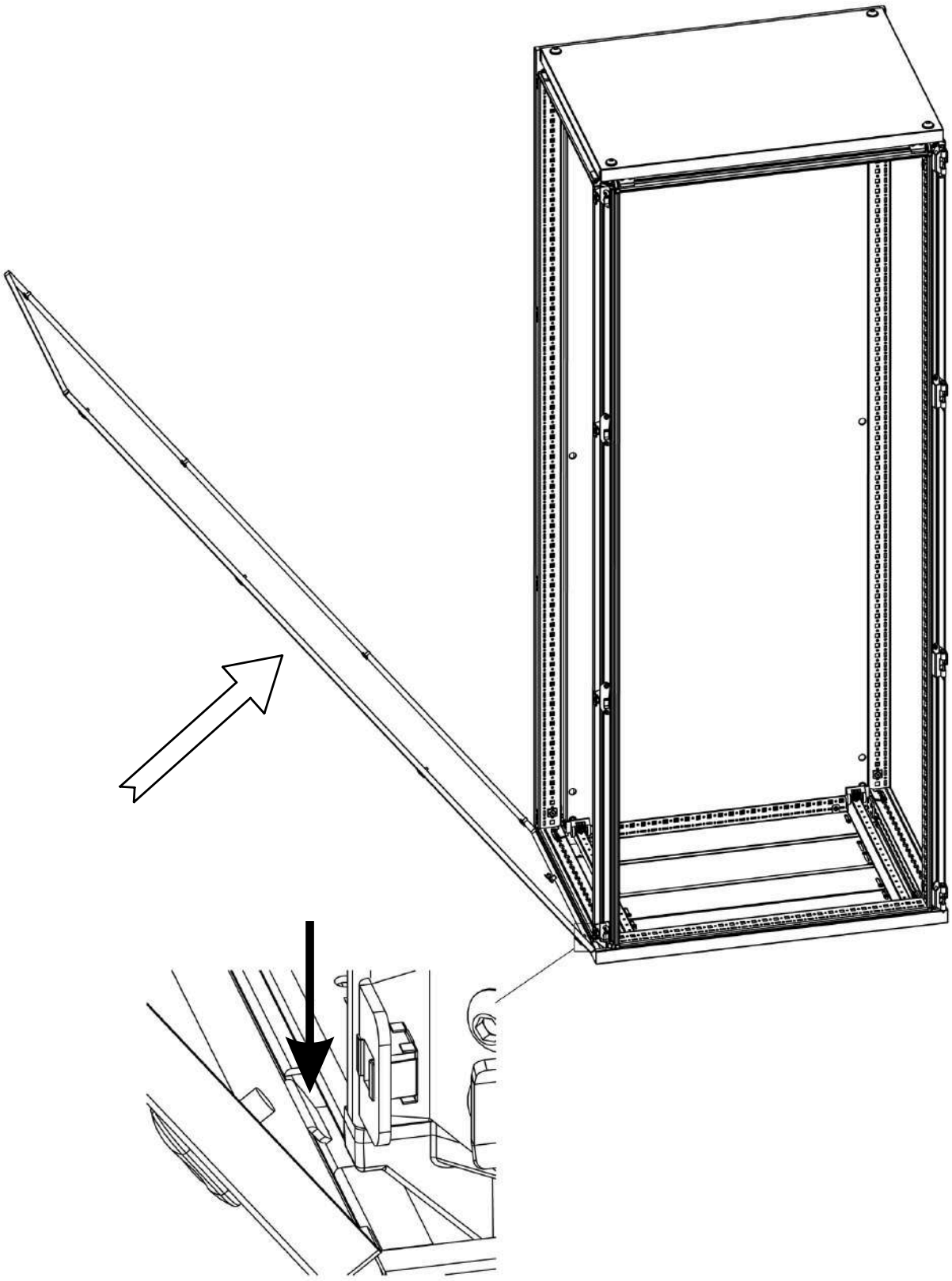

4. ASSEMBLY

4.11 Side Panels assembly

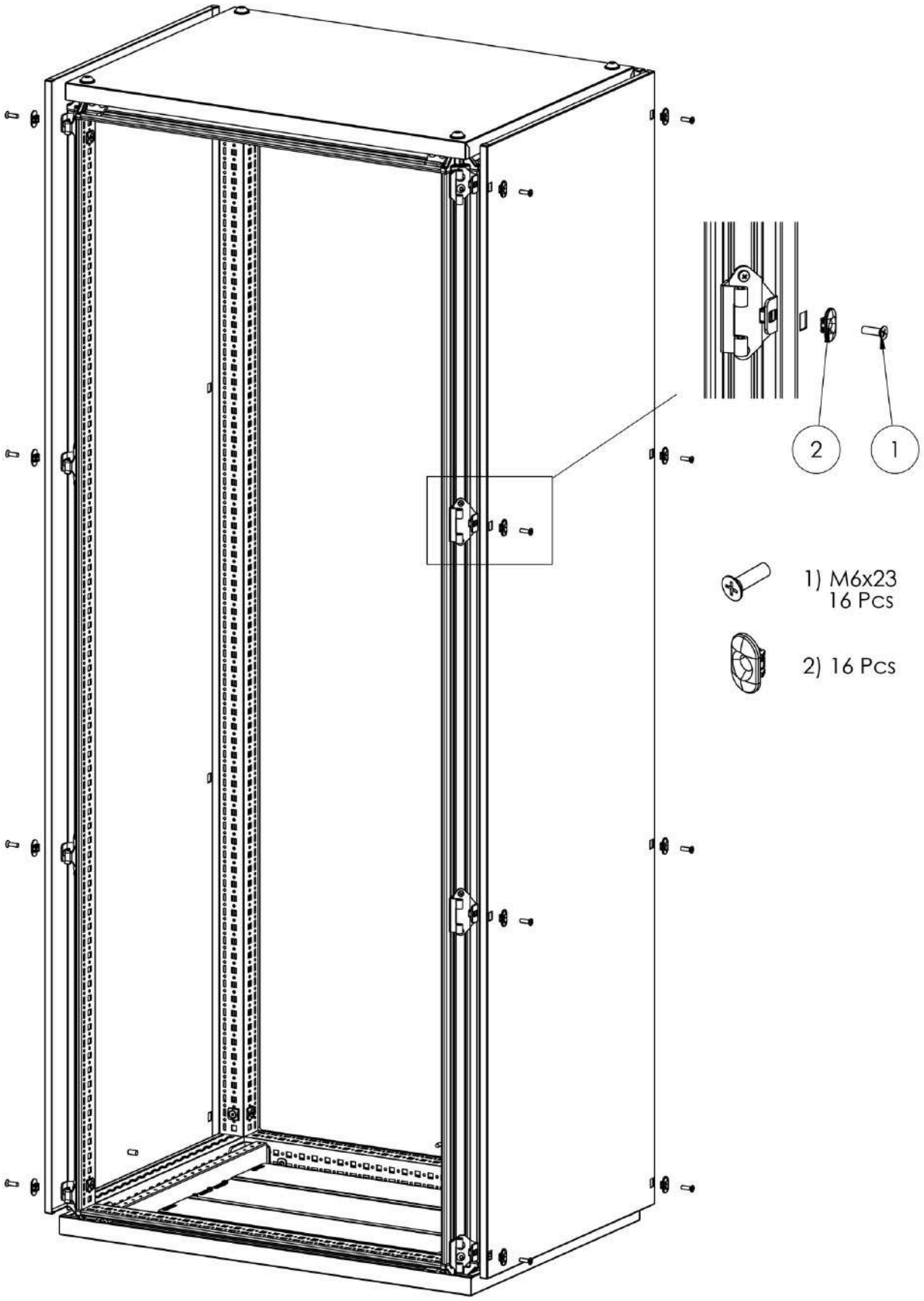

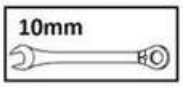

4. ASSEMBLY

4.12 Earthing and potential equalisation

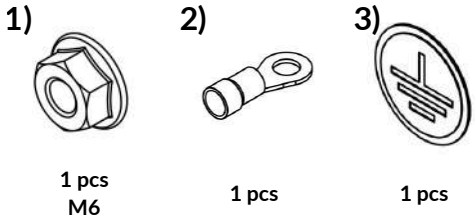

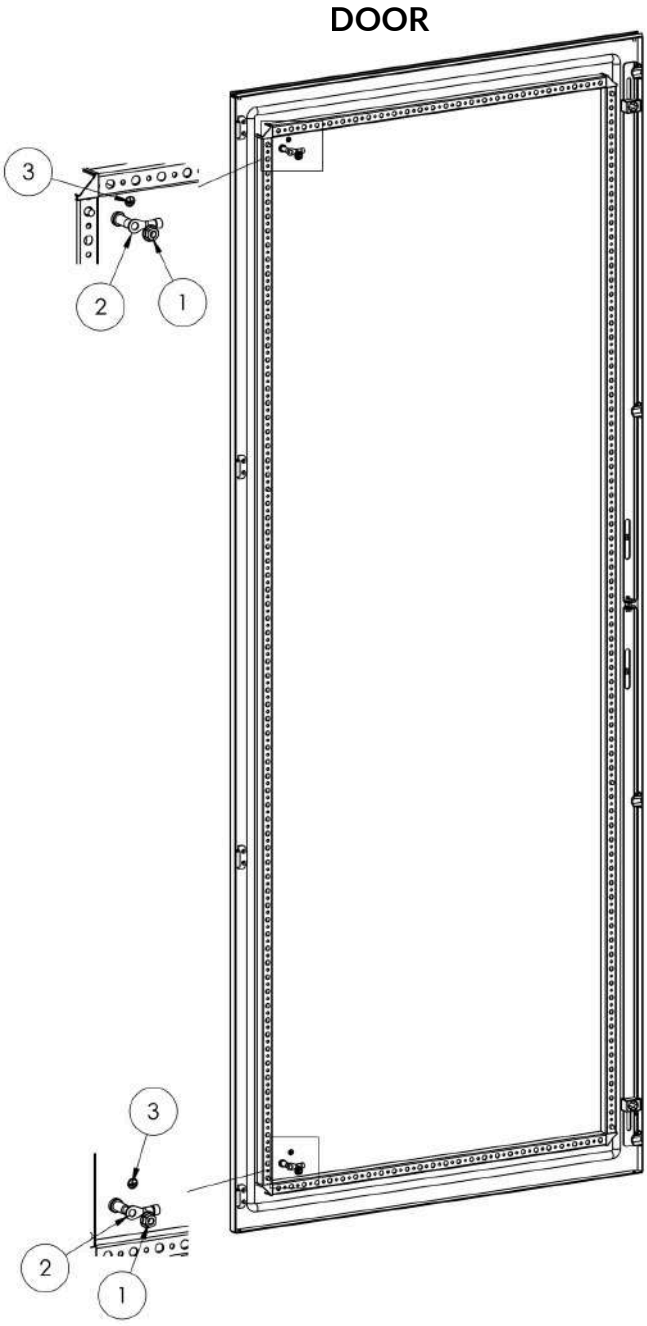

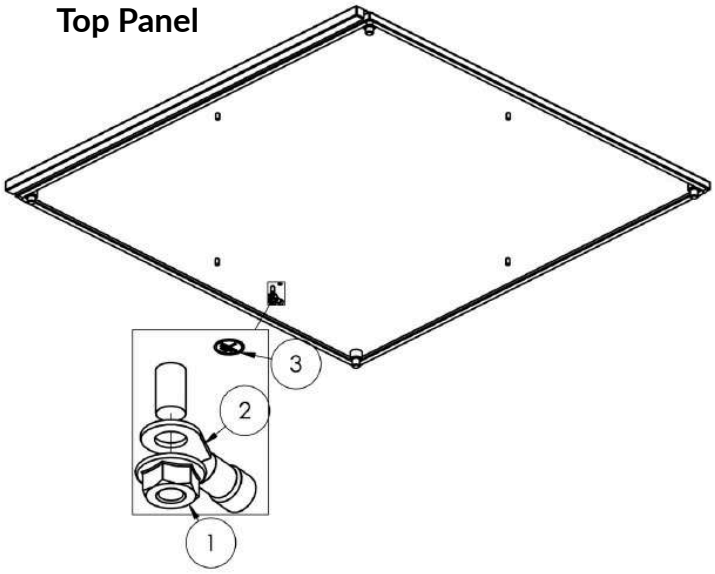

4. ASSEMBLY

4.12 Earthing and potential equalisation

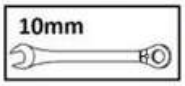

Rear Panel

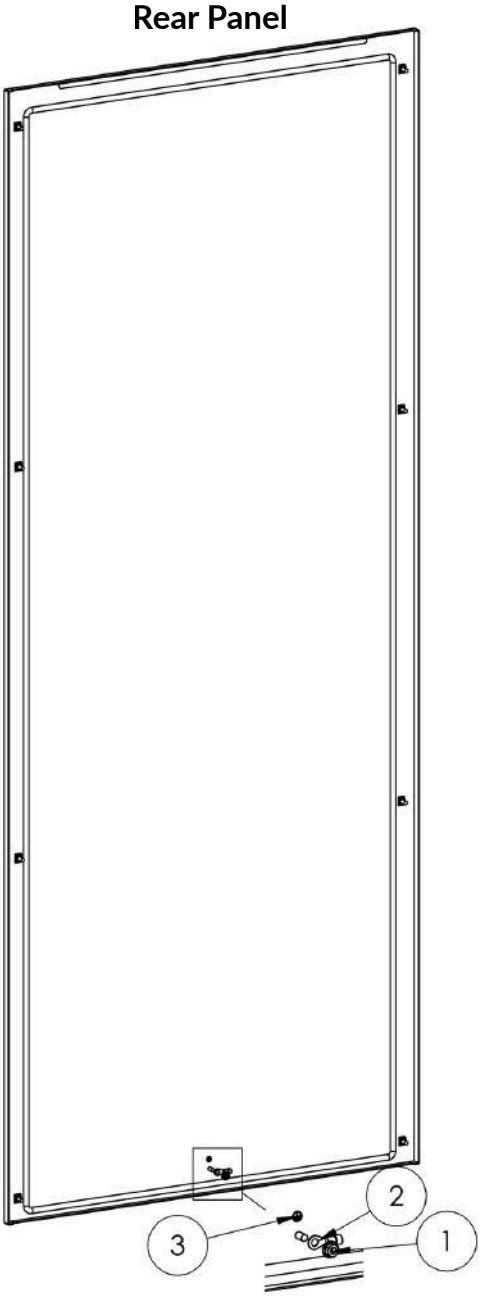

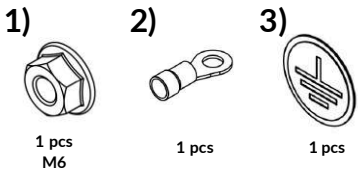

Side Panel

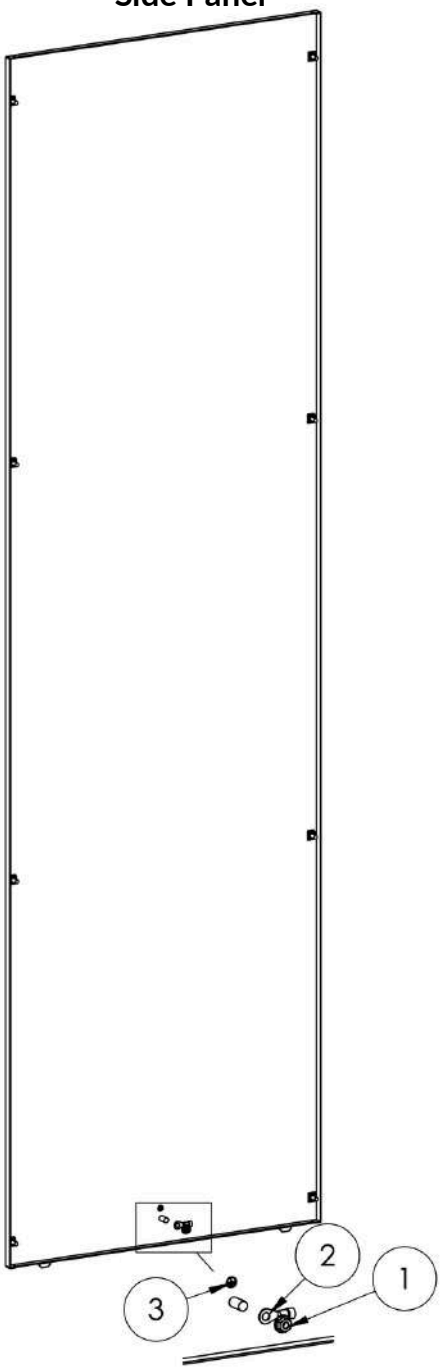

4. ASSEMBLY

4.13 Fixing The Enclosure to the Floor

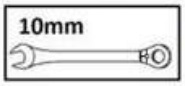

! There is a risk of the enclosure tipping over. The enclosures must be securely fixed to the floor as specified below.

Without Plinth

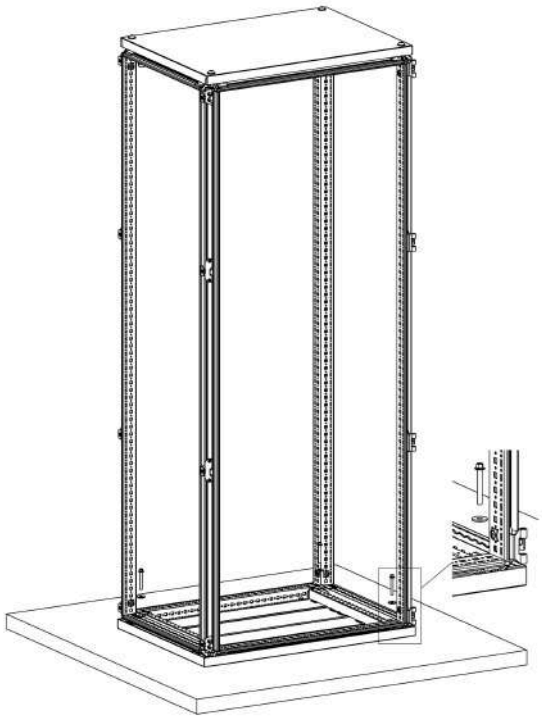

With Plinth

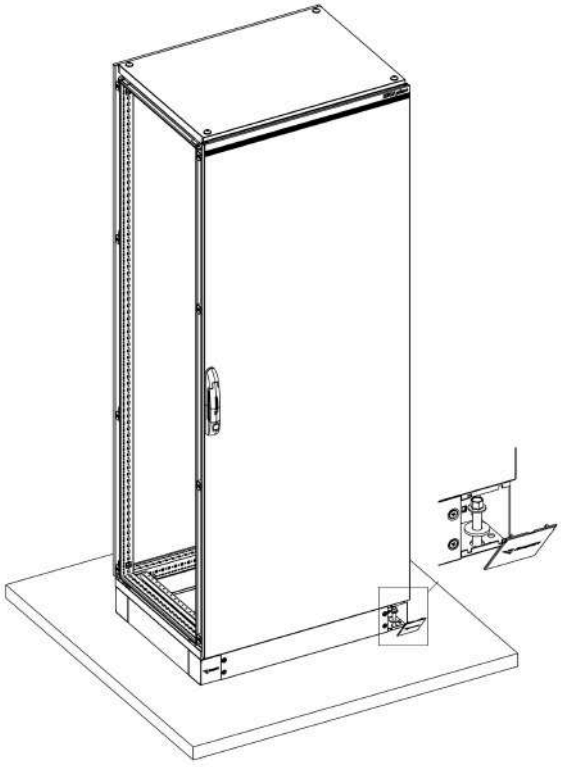

5. TRANSPORT

5.1 Transportation by Crane

5.1.1 Single Enclsoure , max. permissible loads

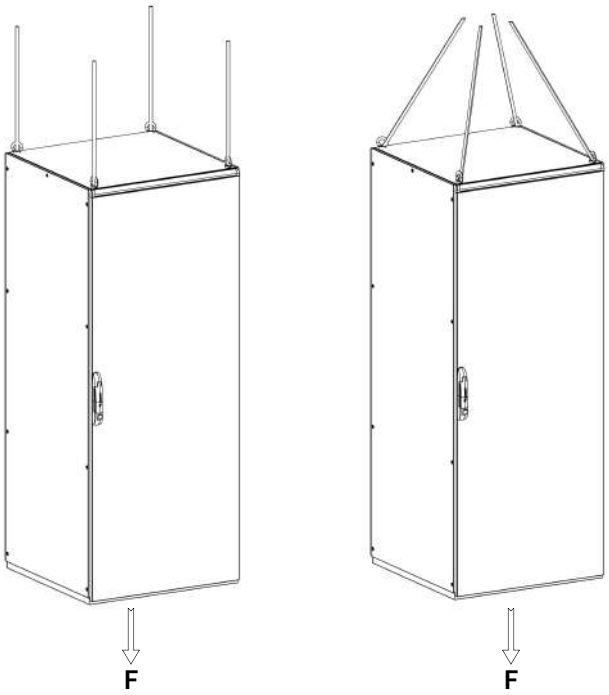

Product Codes :
612.000 (4 pcs)

! Must be ordered additionally

F ≙ at 90° cable pull angle 10000 N
F ≙ at 60° cable pull angle 6400 N
F ≙ at 45° cable pull angle 4800 N

5.1.2 Two Enclsoures / Three enclsoures , max. permissible loads

Product Codes :
711.000 Baying Kit

! Includes 2 pcs with the other fixing brackets

With 60° cable pull angle
F1 : 5000 N
F2 : 5000 N

With 60° cable pull angle
F1 : 5000 N
F2 : 10000 N
F3 : 5000 N

5. TRANSPORT

5.2 Transportation by Fork-lift truck

5.2.1 Single Enclosures

! Lift from corners

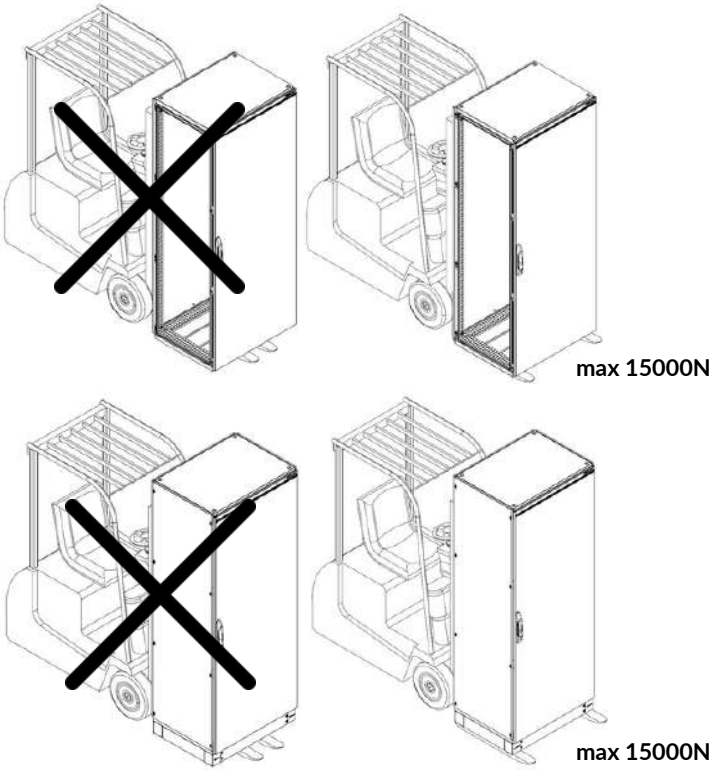

5.2 Transportation by Fork-lift truck

5.2.2 Bayed Enclosures

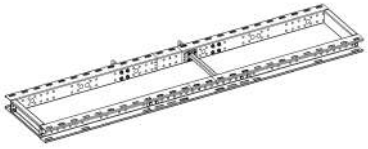

Product Codes :
1049. XXX

! Must be ordered additionally

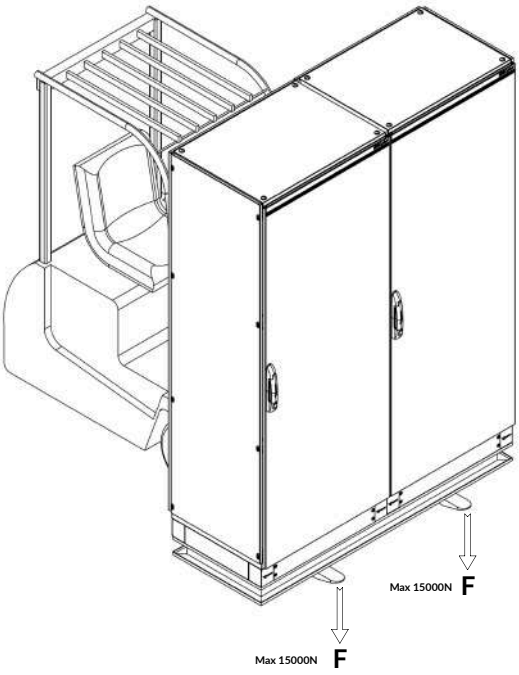

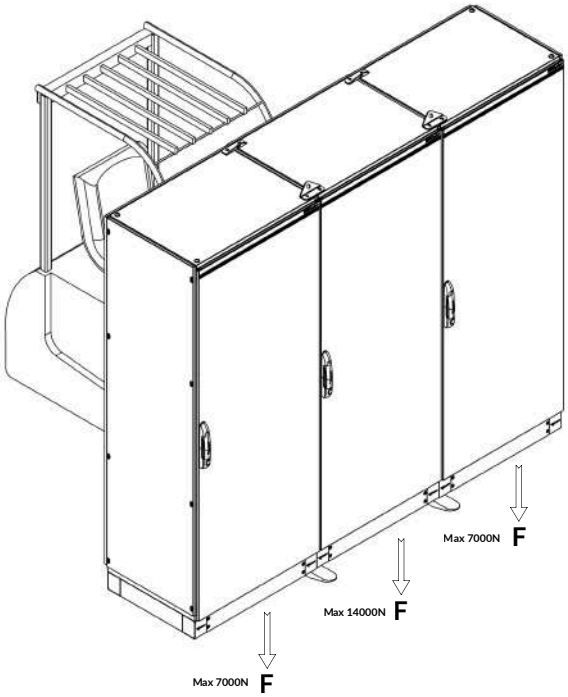

6. LOADING WEIGHTS

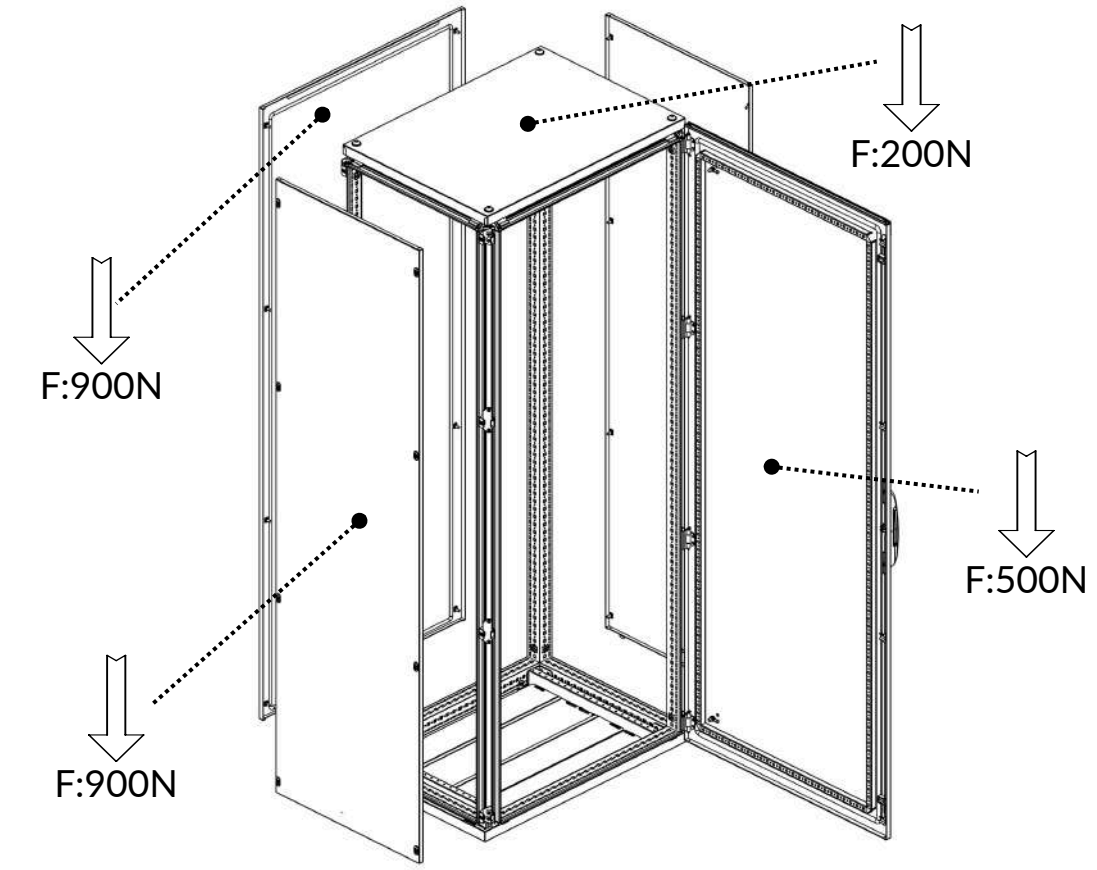

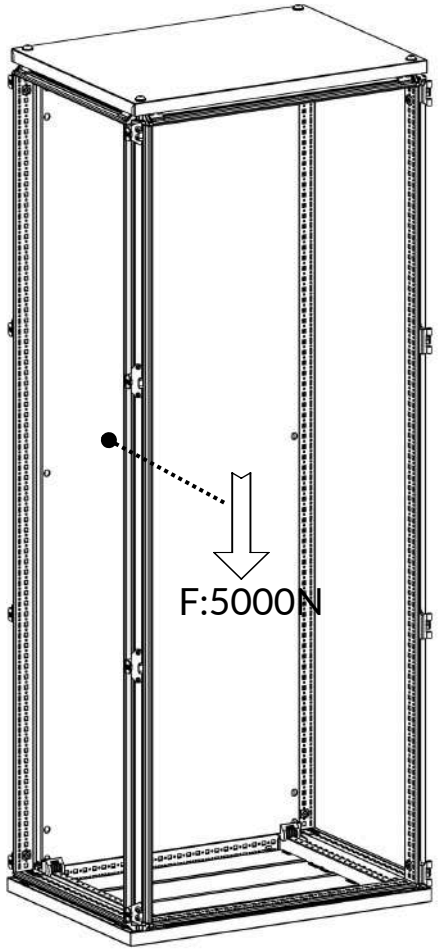

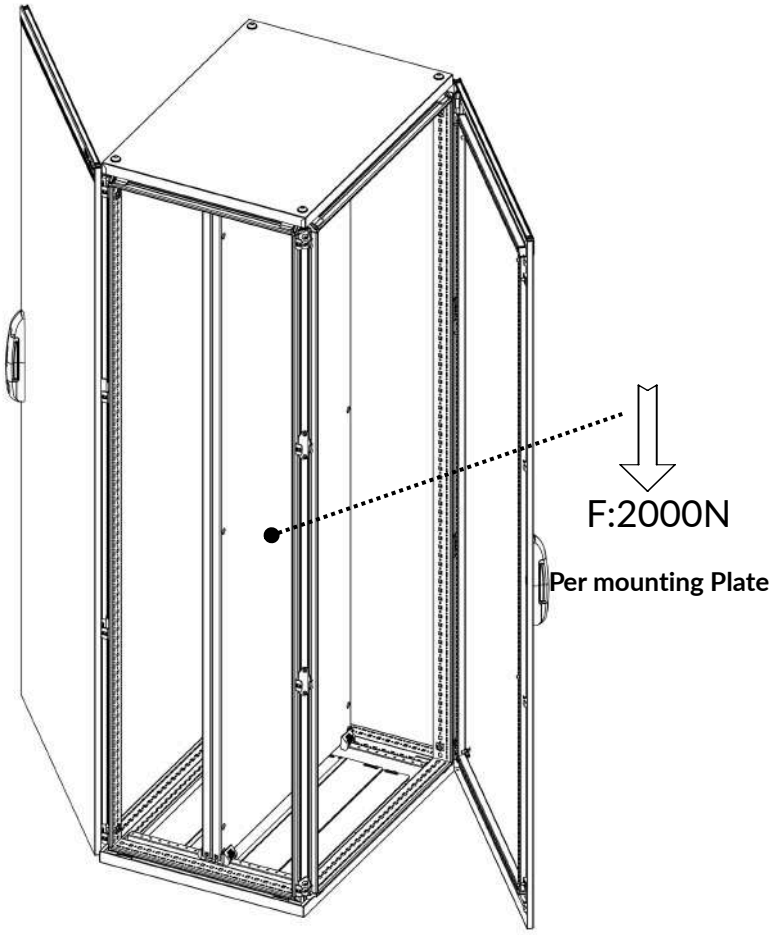

7. POWER DISSIPATION CAPACITY

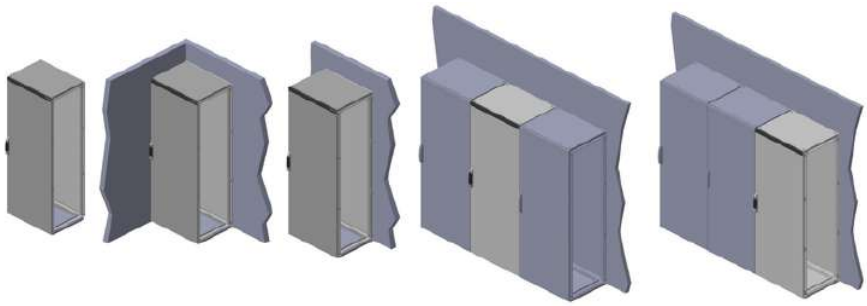

ENCLOSURE SIZE (mm)			Tu = 25 °C / Ti = 45 °C / Pv = 0 W				
Width	Heigth	Depth	W (ΔT = 20 K)				
600	1200	400	275	222	243	201	222
800	1200	400	335	272	293	251	272
1200	1200	400	455	371	391	350	371
600	1200	500	309	250	277	224	250
800	1200	500	372	303	329	276	303
1200	1200	500	498	408	434	381	408
600	1200	600	342	278	310	246	278
800	1200	600	408	334	366	301	334
1200	1200	600	541	446	477	413	446
600	1600	400	354	284	312	256	284
800	1600	400	430	345	373	318	345
1200	1600	400	581	469	497	442	469
600	1600	500	395	318	353	283	318
800	1600	500	474	383	418	348	383
1200	1600	500	632	512	547	478	512
600	1600	600	437	352	394	310	352
800	1600	600	519	420	462	378	420
1200	1600	600	683	556	598	514	556
600	1800	400	393	314	346	284	314
800	1800	400	477	382	414	352	382
1000	1800	400	561	450	481	420	450
1200	1800	400	644	518	549	488	518
400	1800	500	352	280	320	241	280
600	1800	500	439	351	391	313	351
800	1800	500	526	422	462	384	422
1000	1800	500	612	493	533	455	493
1200	1800	500	699	564	604	526	564
400	1800	600	394	314	362	267	314
600	1800	600	484	389	436	342	389
800	1800	600	574	463	511	416	463
1000	1800	600	664	537	585	490	537
1200	1800	600	754	611	659	564	611

7. POWER DISSIPATION CAPACITY

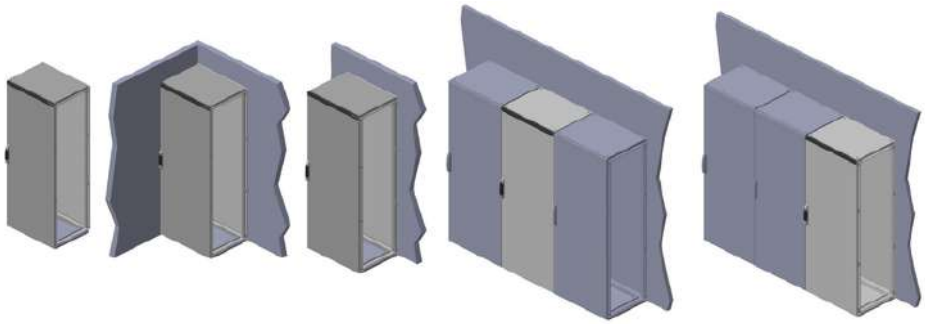

ENCLOSURE SIZE (mm)			Tu = 25 °C / Ti = 45 °C / Pv = 0 W				
Width	Heigth	Depth	W (ΔT = 20 K)				
400	2000	400	341	271	306	237	271
600	2000	400	433	345	380	311	345
700	2000	400	479	382	417	348	382
800	2000	400	524	419	454	385	419
1000	2000	400	616	493	528	460	493
1200	2000	400	707	567	602	534	567
400	2000	500	387	308	352	265	308
600	2000	500	482	385	429	342	385
700	2000	500	530	424	468	381	424
800	2000	500	577	462	506	420	462
1000	2000	500	672	539	583	497	539
1200	2000	500	766	617	660	574	617
400	2000	600	434	345	398	293	345
600	2000	600	531	425	479	373	425
700	2000	600	580	466	519	414	466
800	2000	600	629	506	559	454	506
1000	2000	600	727	586	639	534	586
1200	2000	600	825	666	719	615	666
400	2000	800	526	419	491	349	419
600	2000	800	630	506	577	436	506
700	2000	800	682	549	620	479	549
800	2000	800	734	593	664	522	593
1000	2000	800	838	679	750	609	679
1200	2000	800	943	766	837	695	766
600	2200	600	579	462	521	405	462
800	2200	600	685	549	607	492	549
1200	2200	600	896	722	780	665	722

8. MAINTENANCE

Regular maintenance is recommended for all enclosures to ensure long-term performance and protection level.

Maintenance Interval
Maintenance shall be carried out at regular intervals depending on operating and ambient conditions.It is recommended to perform maintenance at least once per year and to document all actions accordingly.

Hinges
Door hinges shall be checked for smooth operation and lubricated using a suitable, water-free lubricant.

Locking System
The locking mechanism shall be checked for proper operation.All moving parts shall be lubricated using a suitable, water-free lubricant.

Gaskets
Gaskets on contact surfaces shall be replaced completely if damaged.Damage outside the contact areas generally does not affect the sealing performance.To prevent gasket freezing at low temperatures, common agents such as talcum, vaseline or wax may be applied.

General Inspection
All components and surfaces shall be inspected for visible damage.

Corrosion Protection (Sheet Steel Enclosures)
Enclosures shall be inspected for any signs of corrosion.
Detected damage shall be repaired as follows:

Minor surface damage (e.g. scratches):
The affected area shall be lightly sanded and cleaned from corrosion and contaminants.Touch-up paint shall be applied using a paint stick, brush or spray(alternative: 2K-PUR acrylic paint).

Major surface damage:
The surface shall be uniformly prepared and cleaned with white spirit.The entire surface shall be repainted using touch-up paint (2K-PUR acrylic paint).

Stainless Steel Enclosures
Surface damage such as scratches can be removed by polishing.

9. STORAGE

When storing the enclosure, the following conditions shall be ensured:
* Ambient temperature shall not exceed +80 °C.
* Ambient temperature shall not fall below –20 °C.
* Relative humidity shall not exceed 60% for extended periods, and condensation shall be avoided.

Humidity does not affect corrosion-resistant (rustproof) steel.

TEKPAN Products for Harsh Environments

Company Management System Approval

Canadian and US Standards and Approval

IEC Product Standards and Approval

European Standards and Compliance

TEKPAN TEK.ELK.KUM.PANO SAN ve TIC TURIZM A.S.

Halilbeyli Osb Mah, Tekpan Fabrika, Parsa Cad No:2/1 Kemalpasa / İzmir - TURKEY

Phone: +90 232 877 18 77

E-Mail: info@tekpan.com.tr **Web:** www.tekpan.com

tekpan®

INDUSTRIAL ENCLOSURES & CABINETS